C5000 Series

OKI
PRINTING SOLUTIONS

User's Guide

C5650
C5850

High Definition Color

C5000 Series

PREFACE

Every effort has been made to ensure that the information in this document is complete, accurate, and up-to-date. The manufacturer assumes no responsibility for the results of errors beyond its control. The manufacturer also cannot guarantee that changes in software and equipment made by other manufacturers and referred to in this guide will not affect the applicability of the information in it. Mention of software products manufactured by other companies does not necessarily constitute endorsement by the manufacturer.

While all reasonable efforts have been made to make this document as accurate and helpful as possible, we make no warranty of any kind, expressed or implied, as to the accuracy or completeness of the information contained herein.

The most up-to-date drivers and manuals are available from the Oki Europe website:

http://www.okiprintingsolutions.com

Copyright © 2007. All rights reserved.

Oki and Microline are registered trademarks of Oki Electric Industry Company, Ltd.

Energy Star is a trademark of the United States Environmental Protection Agency.

Hewlett-Packard, HP, and LaserJet are registered trademarks of Hewlett-Packard Company.

Microsoft, MS-DOS and Windows are registered trademarks of Microsoft Corporation.

Apple, Macintosh, Mac and Mac OS are registered trademarks of Apple Computer.

Other product names and brand names are registered trademarks or trademarks of their proprietors.

As an Energy Star Program Participant, the manufacturer has determined that this product meets the Energy Star guidelines for energy efficiency.

This product complies with the requirements of the Council Directives 2004/108/EC (EMC) and 2006/95/EC (LVD) and 1999/5/EC (R&TTE), as amended where applicable on the approximation of the laws of the member states relating to Electromagnetic Compatibility and Low Voltage and Radio and Telecommunications Terminal Equipment.

Please note that Microsoft Windows XP was used to produce all screenshots in this manual. These screenshots may vary if you are using any other operating system, but the principle is the same.

EMERGENCY FIRST AID

Take care with toner powder:

If swallowed, induce vomiting and seek medical attention. Never attempt to induce vomiting if person is unconscious.

If inhaled, move the person to an open area for fresh air. Seek medical attention.

If it gets into the eyes, flush with large amounts of water for at least 15 minutes keeping eyelids open. Seek medical attention.

Spillages should be treated with cold water and soap to help reduce risk of staining skin or clothing.

MANUFACTURER

Oki Data Corporation,
4-11-22 Shibaura, Minato-ku,
Tokyo 108-8551, Japan

IMPORTER TO THE EU/AUTHORISED REPRESENTATIVE

Oki Europe Limited (trading as OKI Printing Solutions)

Central House
Balfour Road
Hounslow
TW3 1HY
United Kingdom

For all sales, support and general enquiries contact your local distributor

ENVIRONMENTAL INFORMATION

CONTENTS

Preface 2
Emergency First Aid 3
Manufacturer 3
Importer to the EU/Authorised Representative 3
Environmental information. 3

Contents 4

Notes, Cautions and Warnings 6

Introduction 7
Printer overview 9
Changing the display language. 11

Paper recommendations 12
Cassette trays 13
Multi purpose tray 13
Face down stacker 14
Face up stacker 14
Duplex unit 14

Loading paper 15
Cassette trays 15

Printer settings in Windows 20
Printing preferences in Windows applications 20
Setting from Windows control panel 24

Printer settings in Mac 28
Mac OS X. 28

Colour printing 44
Factors that affect the appearance of prints 44
Tips for printing in colour. 46
Accessing the colour matching options 47
Setting the colour matching options 48
Using the colour swatch feature 49
Using the Colour Correct Utility 50

Menu functions 52
Operator Panel: 52
How to change the settings - User 53
How to change the settings - Administrator 54
Menus 55

Replacing consumable items. 73
Toner: 73
Image drum: 73

Transfer belt: 73
Fuser: 73
Consumable order details 74
Toner cartridge replacement 75
Image drum replacement 80
Replacing the belt unit 84
Fuser replacement 87
Cleaning the LED head 89

Installing upgrades 90
Duplex unit 90
Memory upgrade 91
Additional paper tray. 95
Adjusting Windows printer drivers 96
Storage Cabinet 96

Clearing paper jams 97

Specifications 106

Index. 109

Oki contact details 111

NOTES, CAUTIONS AND WARNINGS

NOTE
A note appears in this manual like this. A note provides additional information to supplement the main text which may help you to use and understand the product.

CAUTION!

A caution appears in this manual like this. A caution provides additional information which, if ignored, may result in equipment malfunction or damage.

WARNING!

A warning appears in this manual like this. A warning provides additional information which, if ignored, may result in a risk of personal injury.

INTRODUCTION

Congratulations on buying this Oki Printing Solutions colour printer. Your new printer is designed with advanced features to give you clear, vibrant colour prints and crisp black and white pages at high speed on a range of print media for the office.

Your printer includes these features:

- ProQ2400, multi-level technology produces subtler tones and smoother gradations of colour to lend photographic quality to your documents;
- Up to 22 (C5650) or 26 (C5850) pages per minute in full colour for fast printing of high impact colour presentations and other documents;
- Up to 32 pages per minute in black and white for fast and efficient printing of all general purpose documents not requiring colour;
- 600 x 600, 1200 x 600 dpi (dots per inch) and ProQ2400 print resolution for high quality image production showing the finest detail;
- Single Pass colour Digital LED technology for high speed processing of your printed pages;
- 10Base-T and 100Base-TX network connection lets you share this valuable resource among users on your office network;
- Photo Enhance mode to improve printouts of photographic images;
- "Ask Oki" – a user-friendly function for Windows that provides a direct link from your printer driver screen to a dedicated web site specific to the exact model you are using. This is where you'll find all the advice, assistance and support you could need to help you get the best possible results from your Oki printer;
- "WebPrint Internet Explorer plugin" - another function for Windows that enables you to print web pages properly;
- Template Manager 2006 utility for Windows enables the design and print of Business cards, banners, labels with ease.

Additionally, the following optional features are also available:

- Automatic two-sided (duplex) printing for economical use of paper and compact printing of larger documents (standard on dn models);
- Additional paper tray for loading a further 530 sheets to minimise operator intervention, or different paper stocks for letterhead stationery, alternative paper sizes or other print media;
- Additional memory allows printing of more complex pages. For example, high resolution banner printing;
- Storage Cabinet.

PRINTER OVERVIEW

FRONT VIEW

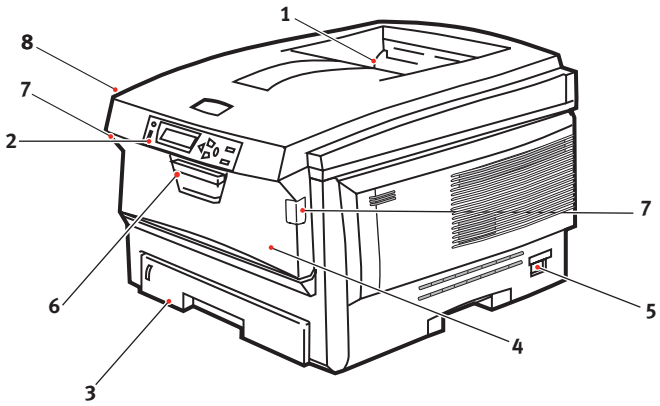

1. Output stacker, face down. Standard printed copy delivery point. Holds up to 250 sheets at 80g/m². 2. Operator panel. Menu driven operator controls and LCD display panel. 3. Paper tray. Standard blank paper tray. Holds up to 300 sheets of 80g/m² paper.	4. Multi purpose tray (80g/m²). Used for feeding heavier paper stocks, envelopes and other special media. Also for manual feeding of single sheets when required. 5. ON/OFF switch. 6. Front cover release lever. 7. Multi-purpose tray release lever 8. Top cover release button.

The LCD display language can be changed to show different languages. (See "Changing the display language" on page 11.)

REAR VIEW

This view shows the connection panel, the rear output stacker and the location of the optional duplex (two-sided printing) unit.

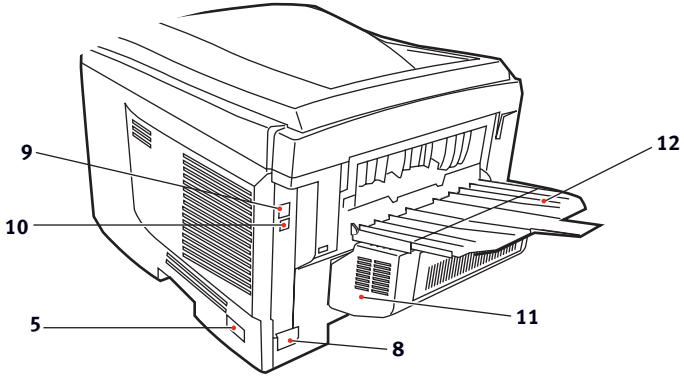

5. ON/OFF switch. 8. AC power socket. 9. USB interface.	10. Network interface.* 11. Duplex unit (when fitted). 12. Rear, face up, 100 sheet stacker.

* ***The Network Interface has a protective "plug" which must be removed before connection can be made.***

When the rear paper stacker is folded down paper exits the printer through the rear of the printer and is stacked here face up. This is mainly used for heavy print media. When used in conjunction with the multi purpose feed tray, the paper path through the printer is essentially straight. This avoids bending the paper around curves in the paper path and enables feeding of up to 203g/m² media.

CHANGING THE DISPLAY LANGUAGE

The default language used by your printer for display messages and for report printing is English. If required, this can be changed to:l

German	Danish
French	Dutch
Italian	Turkish
Spanish	Portuguese
Swedish	Polish
Russian	Greek
Finnish	Czech
Hungarian	Norwegian

NOTE

1. *The list above is neither conclusive nor exhaustive.*
2. *See the information enclosed with the product (Operator Panel Language Set-up utility) on the procedure for changing the language setting.*

PAPER RECOMMENDATIONS

Your printer will handle a variety of print media, including a range of paper weights and sizes, transparencies and envelopes. This section provides general advice on choice of media, and explains how to use each type.

The best performance will be obtained when using standard 75~90g/m² paper designed for use in copiers and laser printers. Suitable types are:

- Arjo Wiggins Conqueror Colour Solutions 90g/m²;
- Colour Copy by Neusiedler.

Use of heavily embossed or very rough textured paper is not recommended.

Pre-printed stationery can be used, but the ink must not offset when exposed to the high fuser temperatures used in the printing process.

Envelopes should be free from twist, curl or other deformations. They should also be of the rectangular flap type, with glue that remains intact when subjected to hot roll pressure fusing used in this type of printer. Window envelopes are not suitable.

Transparencies should be of the type designed for use in copiers and laser printers. We strongly recommend Oki Printing Solutions transparencies (Order No. 01074101). In particular, avoid office transparencies designed for use by hand with marker pens. These will melt in the fuser and cause damage.

Labels should also be of the type recommended for use in copiers and laser printers, in which the base carrier page is entirely covered by labels. Other types of label stock may damage the printer due to the labels peeling off during the printing process.

CASSETTE TRAYS

SIZE	DIMENSIONS	WEIGHT (G/M²)	
A6 (Tray 1 only)	105 x 148mm		
A5	148 x 210mm		
B5	182 x 257mm	Light	64-74g/m²
Executive	184.2 x 266.7mm	Medium	75-104g/m²
A4	210 x 297mm	Heavy	105-120g/m²
Letter	215.9 x 279.4mm	Ultra heavy (Tray 2/MPT only)	121-203g/m²
Legal 13in.	216 x 330mm		
Legal 13.5in.	216 x 343mm		
Legal 14in.	216 x 356mm		

If you have identical paper stock loaded in another tray (2nd tray if you have one, or multi purpose tray) you can have the printer automatically switch to the other tray when the current tray runs out of paper. When printing from Windows applications, this function is enabled in the driver settings. (See "Printer Settings in Windows" later in this guide.) When printing from other systems, this function is enabled in the Print Menu. (See "Menu Functions" later in this guide.)

MULTI PURPOSE TRAY

The multi purpose tray can handle the same sizes as the cassette trays but in weights up to 203g/m². For very heavy paper stock use the face up (rear) paper stacker. This ensures that the paper path through the printer is almost straight.

The multi purpose tray can feed paper widths as small as 100mm and lengths up to 1200mm (banner printing).

For paper lengths exceeding 356mm (Legal 14in.) use paper stock between 90g/m² and 128g/m² and the face up (rear) paper stacker.

Use the multi purpose tray for printing on envelopes and transparencies. Up to 50 sheets of transparencies or 10 envelopes can be loaded at one time, subject to a maximum stacking depth of 10mm.

Paper or transparencies should be loaded print side up and top edge into the printer. Do not use the duplex (two-sided printing) function.

FACE DOWN STACKER

The face down stacker on the top of the printer can hold up to 250 sheets of 80g/m² standard paper, and can handle paper stocks up to 176g/m². Pages printed in reading order (page 1 first) will be sorted in reading order (last page on top, facing down).

FACE UP STACKER

The face up stacker at the rear of the printer should be opened and the tray extension pulled out when required for use. In this condition paper will exit via this path, regardless of driver settings.

The face up stacker can hold up to 100 sheets of 80g/m² standard paper, and can handle stocks up to 203g/m².

Always use this stacker and the multi purpose feeder for paper stocks heavier than 176g/m².

DUPLEX UNIT

This option provides automatic two-sided printing on the same range of paper sizes as tray 2 (i.e. all cassette sizes except A6), using paper stocks from 75-105g/m².

NOTE
The duplex unit comes as standard with dn models.

LOADING PAPER

CASSETTE TRAYS

1. Remove the paper tray from the printer.

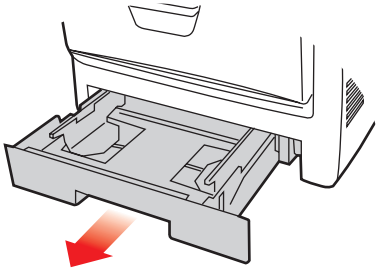

2. Fan the paper to be loaded at the edges (1) and in the middle (2) to ensure that all sheets are properly separated, then tap the edges of the stack on a flat surface to make it flush again (3).

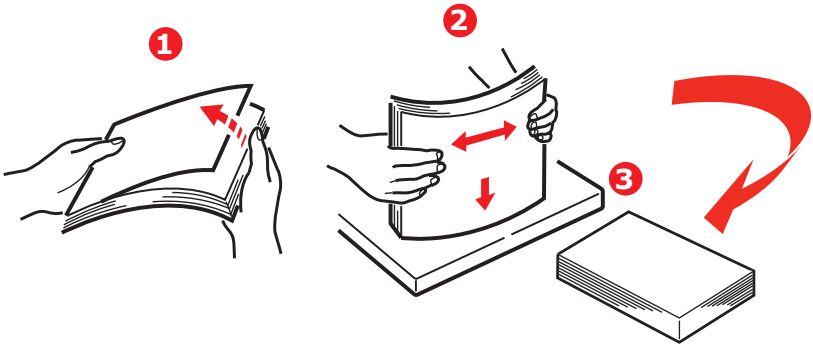

3. Load letter headed paper face down and top edge towards the front of the printer, as shown.

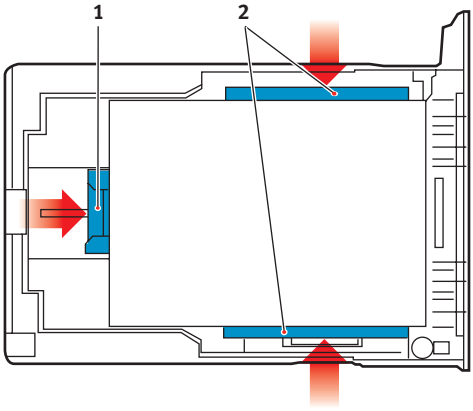

4. Adjust the rear stopper (1) and paper guides (2) to the size of paper being used.

To prevent paper jams:

> Do not leave space between the paper and the guides and rear stopper.

> Do not overfill the paper tray. Capacity depends on the type of paper stock.

> Do not load damaged paper.

> Do not load paper of different sizes or types at the same time.

> Do not pull the paper tray out during printing (except as described below for the 2nd tray).

> Close the paper tray gently.

5. If you have two trays and you are printing from the 1st (upper) tray, you can pull out the 2nd (lower) tray during printing to reload it. However, if printing from the 2nd (lower) tray, do not pull out the 1st (upper) tray. This will cause a paper jam.

6. For face down printing, make sure the face up (rear) stacker (3) is closed (the paper exits from the top of the printer). Stacking capacity is approximately 250 sheets, depending on paper weight.

7. For face up printing, make sure the face up (rear) stacker (3) is open and the paper support (4) is extended. Paper is stacked in reverse order and tray capacity is approximately 100 sheets, depending on paper weight.

8. Always use the face up (rear) stacker for heavy paper (card stock etc.).

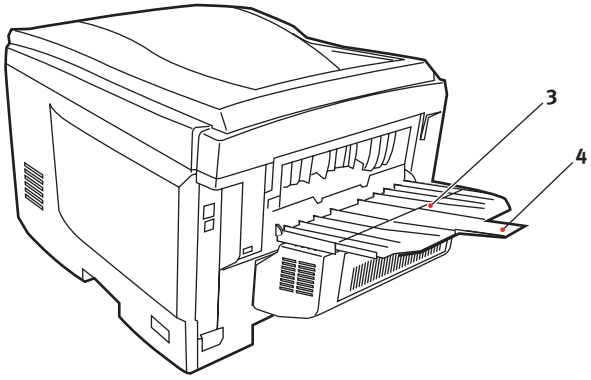

CAUTION!

Do not open or close the rear paper exit while printing as it may result in a paper jam.

MULTI PURPOSE TRAY

1. Open the multi purpose tray (1).

2. Fold out the paper supports (2).

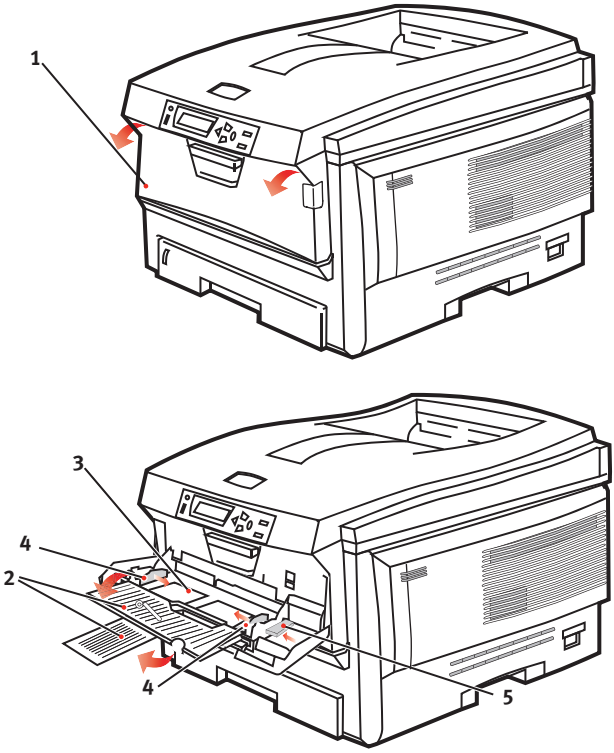

3. Press gently down on the paper platform (3) to ensure it is latched down.

4. Load the paper and adjust the paper guides (4) to the size of paper being used.

> For single-sided printing on headed paper load the paper into the multi purpose tray with pre-printed side up and top edge into the printer.

- > For two-sided (duplex) printing on headed paper load the paper with pre-printed side down and top edge away from the printer. (Optional duplex unit must be installed for this function.)
- > Envelopes should be loaded face up with top edge to the left and short edge into the printer. Do not select duplex printing on envelopes.
- > Do not exceed the paper capacity of about 50 sheets or 10 envelopes. Maximum stacking depth is 10mm.

5. Press the tray latch button (5) inwards to release the paper platform, so that the paper is lifted and gripped in place.

Set the correct paper size for the multi purpose tray in the Media Menu (see “Menu Functions”).

PRINTER SETTINGS IN WINDOWS

Your printer's operator panel menus provide access to many options.

The Windows printer driver also contains settings for many of these items. Where items in the printer driver are the same as those in the operator panel menus, and you print documents from Windows, the settings in the Windows printer driver will override those items in the operator panel menus.

The illustrations in this chapter show Windows XP. Other Windows versions may appear slightly different, but the principles are the same.

PRINTING PREFERENCES IN WINDOWS APPLICATIONS

When you choose to print your document from a Windows application program a print dialogue box appears. This dialogue usually specifies the name of the printer on which you will print your document. Next to the printer name is a **Properties** button.

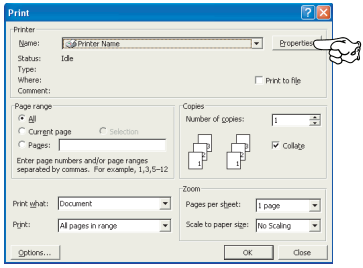

When you click **Properties** a new window opens which contains a short list of the printer settings available in the driver, which you can choose for this document.

The settings available from within your application are only those which you may want to change for specific applications or documents. Settings you change here will usually only last for as long as the particular application program is running.

SETUP TAB

When you click the Properties button from your application's Print dialogue, the driver window opens to allow you to specify your printing preferences for the current document.

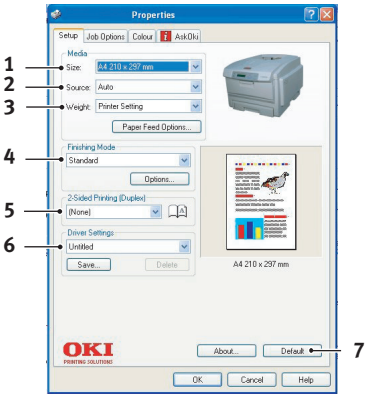

1. Paper size should be the same as the page size of your document (unless you wish to scale the printout to fit another size), and should also be the same as the size of paper you will feed into the printer.
2. You can choose the source of the paper to feed, which may be Tray 1 (the standard paper tray), Tray 2 (if you have the optional 2nd paper tray installed) or the multi purpose feeder. You can also click on the appropriate part of the screen graphic to select your preferred tray.
3. The setting for paper weight should match the type of paper on which you intend to print.
4. A variety of document finishing options can be selected, such as normal one page per sheet, or N-up (where N can be any number up to 16) for printing scaled down pages at more than one page per sheet. Booklet printing prints two pages per sheet on each side of the paper so that when folded they make up a booklet. Booklet printing requires the duplex unit to be installed in your printer.

   Poster printing will print large pages as tiles spread over multiple sheets.
5. For two-sided printing, you can choose to flip the page by the long edge or the short edge. Of course, this requires that a duplex unit be installed in your printer.
6. If you have changed some printing preferences before and saved them as a set, you can recall them to avoid having to set them individually each time you need them.
7. A single on-screen button restores the default settings.

JOB OPTIONS TAB

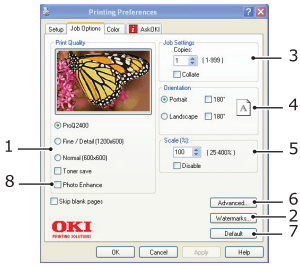

1. The output resolution of the printed page can be set as follows.

> The ProQ2400 setting prints at 600 x 600dpi x 2 bit. This option requires the most printer memory and takes the longest to print.

> The Fine/Detail setting prints at 1200 x 600dpi and is adequate for all but the most discerning applications.

> The Normal setting prints at 600 x 600dpi and is suitable for most draft documents, where print quality is less critical.

2. You can print watermark text behind the main page image. This is useful for marking documents as draft, confidential, etc.

3. You can select up to 999 copies to print consecutively, although you will need to top up the paper tray during such a long print run.

4. Page orientation can be set to either portrait (tall) or landscape (wide).

5. You printed pages can be scaled to fit larger or smaller stationery.

6. Clicking the Advanced button gives you access to further settings. For example, you can elect to have black areas printed using 100%K toner (a more matte appearance).

7. A single on-screen button restores the default settings.

8. The quality of photographic images can be improved.

COLOUR TAB

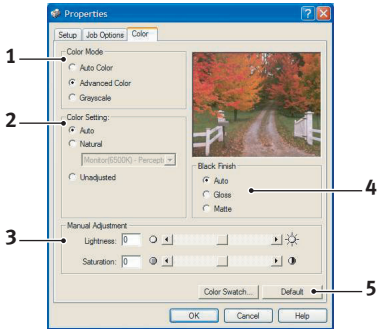

1. Control over the colour output of your printer may be performed automatically, or for advanced control, by manual adjustment. The automatic setting will be appropriate in most cases. The other options in this window only become visible when you select a choice other than Auto. For greyscale printing, the printer runs at 24ppm and all pages are printed in black and white.

2. You can choose from a range of colour matching options, depending on the image source for your document. For example, a photograph taken on a digital camera might require different colour matching to a business graphic created in a spreadsheet application. Again, for most general purpose use, automatic is the best choice.

3. Printed output may be made lighter or darker, or the colours made more saturated and vibrant as required.

4. Black areas may be printed using 100% cyan, magenta and yellow (composite black), giving a more glossy appearance, or using only black toner (true black), giving a more matte appearance. Choosing the automatic setting allows the driver to make the most appropriate choice depending on image content.

5. A single on-screen button restores the default settings.

SETTING FROM WINDOWS CONTROL PANEL

When you open the driver properties window directly from Windows, rather than from within an application program, a somewhat more extensive range of settings is provided. Changes made here will generally affect all documents you print from Windows applications, and will be remembered from one Windows session to the next.

GENERAL TAB

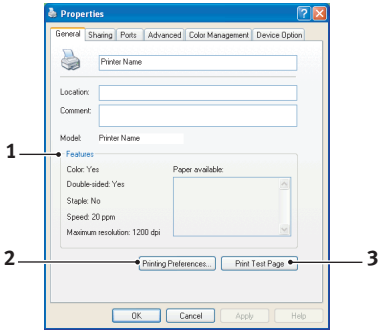

1. This area lists some of the main features of your printer, including optional items, such as duplex (two-sided) printing.

2. This button opens the same windows as described earlier for items which can be set from within application programs. Changes you make here, however, will become the new default settings for all Windows applications.

3. This button prints a test page to ensure that your printer is working.

ADVANCED TAB

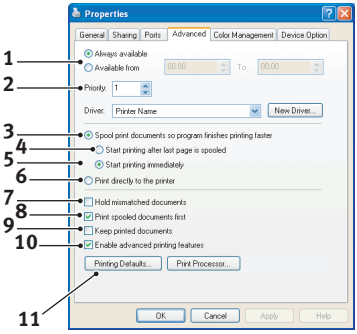

1. You can specify which times of day your printer will be available.

2. Indicates current priority, from 1 (lowest) to 99 (highest). Highest priority documents will print first.

3. Specifies that documents should be spooled (stored in a special print file) before being printed. The document is then printed in the background, allowing your application program to become available more quickly.

4. This specifies that printing should not start until the last page has been spooled. If your application program needs a lot of time for further computation in the middle of printing, causing the print job to pause for more than a short period, the printer could prematurely assume that the document has finished. Selecting this option would prevent that situation, but printing will be completed a little later, as the start is delayed.

5. This is the opposite choice to the one above. Printing starts as soon as possible after the document begins spooling.

6. This specifies that the document should not be spooled, but printed directly. Your application will not normally be ready for further use until the print job is complete. This requires less disk space on your computer, since there is no spool file.

7. Directs the spooler to check the document setup and match it to the printer setup before sending the document to print. If a mismatch is detected, the document is held in the print queue and does not print until the printer setup is changed and the document restarted from the print queue. Mismatched documents in the queue will not prevent correctly matched documents from printing.

8. Specifies that the spooler should favour documents which have completed spooling when deciding which document to print next, even if completed documents are lower priority than documents which are still spooling. If no documents have completed spooling, the spooler will favour larger spooling documents over shorter ones. Use this option if you want to maximise printer efficiency. When this option is disabled the spooler chooses documents based only on their priority settings.

9. Specifies that the spooler should not delete documents after they are completed. This allows documents to be re submitted to the printer from the spooler instead of printing again from the application program. If you use this option frequently it will require large amounts of disk space on your computer.

10. Specifies whether advanced features, such as booklet printing, page order and pages per sheet, are available, depending on your printer. For normal printing keep this option enabled. If compatibility problems occur you can disable the feature. However, these advanced options may then not be available, even though the hardware might support them.

11. This button provides access to the same setup windows as when printing from applications. Changes made via the Windows Control Panel become the Windows default settings.

DEVICE OPTIONS TAB

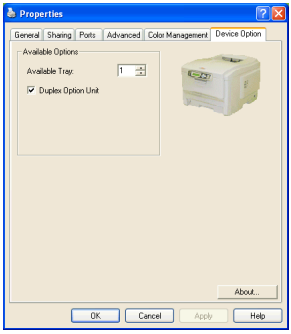

In this window you can select which optional upgrades are installed on your printer. This is covered in more detail in the section in this guide about installing upgrades.

PRINTER SETTINGS IN MAC

MAC OS X

The information in this section is based on Mac OS X Tiger (10.4). Other versions such as Panther (10.3) and Jaguar(10.2) versions may appear slightly different, but the principles are the same.

Setting Printing Options

You can choose your printer and select options for how you want your documents to print from the Print dialog box.

To set your printer options:

1. Open the document you want to print.
2. To change the paper size or page orientation, select **File > Page Setup**. For a description of each option, see "Page setup options" on page 30.

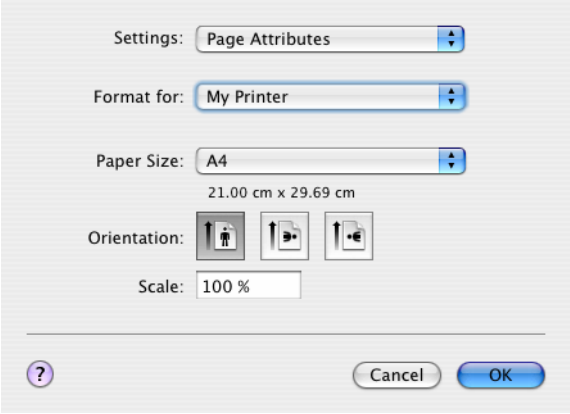

3. Close the **Page Setup** dialog box.
4. Select **File** > **Print**.
5. Select your printer from the **Printer** drop-down menu.

6. To change any printer driver settings, select the required options from the **Settings** drop-down menu. You can select more options from the **Copies & Pages** menu. For a description of these options, see "Print options" on page 31.

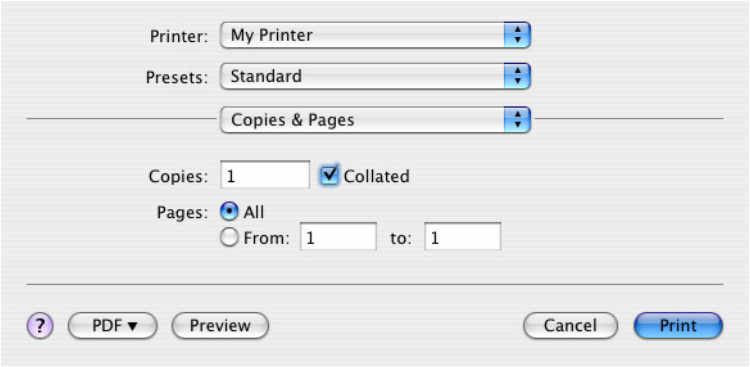

7. Click the **Print** button.

SETTING PRINTING OPTIONS - SAVING DRIVER SETTINGS

You can save a set of printer driver options to use for future documents.

1. Open the document you want to print.
2. To change the paper size or page orientation, select **File** > **Page Setup**.

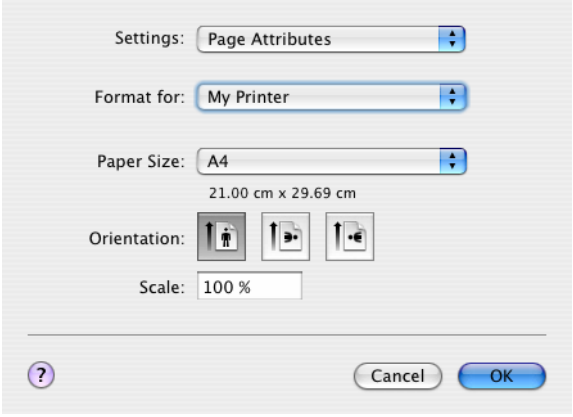

3. Select **Save As Default** from the Settings drop-down menu.

4. To save the current printer driver settings as a preset, select **Save As** from the Preset menu.

5. Enter a name for your preset and click **OK**.

CHANGING THE DEFAULT PRINTER AND PAPER SIZE

The following steps describe how to change your default printer and the paper size options.

1. Select **Apple menu** > **System Preferences**.

2. Click the **Print & Fax** icon.

3. Select your printer in the **Selected Printer in Print Dialog** drop-down menu.

4. Select your required paper size in the **Default Size in Page Setup** drop-down menu.

PAGE SETUP OPTIONS

This section provides a description of the page setup options available to you.

Page setup options

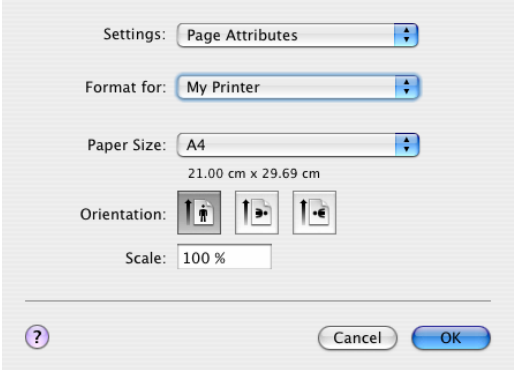

Page Attributes

You can select **Save As Default** to use the current Page Setup settings as a standard for all documents.

Format for

Allows you to select your printer model before changing options such as Paper size and Orientation.

Paper Size

Select a paper size to match your document and the paper loaded in the printer. The paper margin is 4.2mm at all edges. To specify your own paper sizes, select **Manage Custom Sizes...**

Scale

You can scale documents up or down to fit onto different paper sizes. To fit your document on a specific paper size, select **Options** in the **Paper Handling** drop-down menu in the **Print Options** dialog box (see "Print options" on page 31).

Orientation

You can select a portrait or landscape option. When using landscape, you can rotate the document 180 degrees.

PRINT OPTIONS

Copies & pages

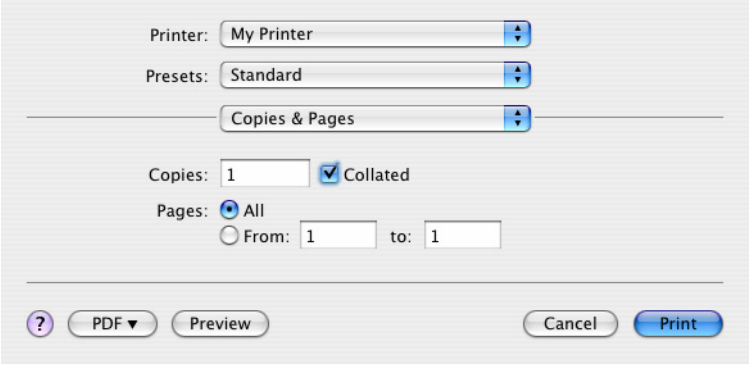

Copies

This option allows you to enter the number of copies to print. If you select **Collate**, all pages of the document will print before the next copy prints.

Pages

You can select whether to print all pages of a document or just a section of it.

Layout

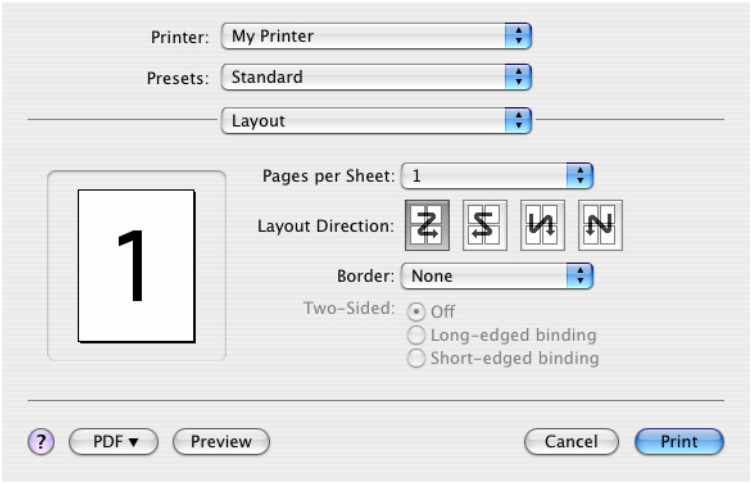

Pages per sheet

You can shrink multiple pages and print them on a single sheet of paper. For example, choosing 4-up will tile four of your document's pages across a single sheet of paper.

You can control the order in which the documents are tiled and also choose to surround each document page with a border.

Two-sided

You cannot use the two sided printing options in this panel. Use the options in the Duplex panel instead.

Scheduler

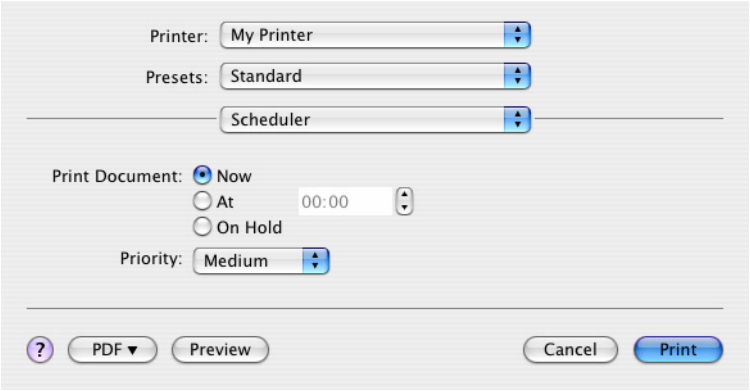

This option lets you choose whether to print your document immediately, or defer printing until later. You can also assign a priority to a print job.

These features are useful if you are printing large documents that take a long time to print.

Paper handling

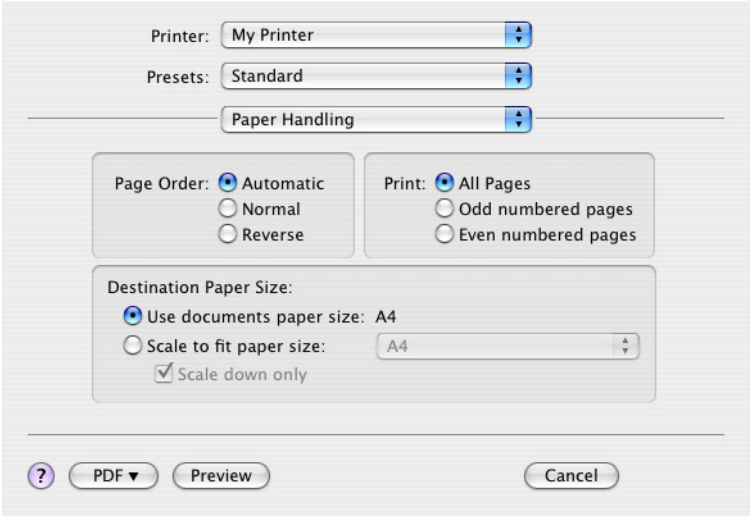

Page order

You can choose to print your document in the normal page order (1,2,3..) or reverse order (..3,2,1).

Print

This option allows you to choose whether to print only odd or even numbered pages. This is useful if you are using manual duplex for which you first print all odd pages, re-insert the paper in the printer and then print all even pages.

Destination paper size

Scale documents to fit on the size of paper in your printer. For example, you can take a document formatted for A3 and print it on A4 paper using an A4 printer.

ColorSync

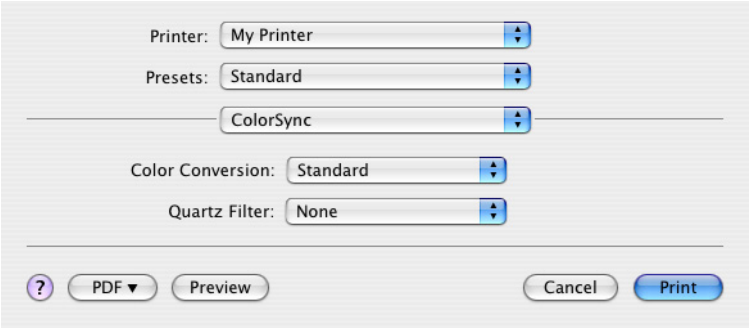

Color conversion

For Color Conversion, Standard is the only option available for your printer model.

Quartz Filter

Choose a Quartz filter if you wish to apply a special effect to your print job, such as Sepia or Blue Tone. This is only available on Mac OS X 10.3 (Panther) or later versions.

Cover page

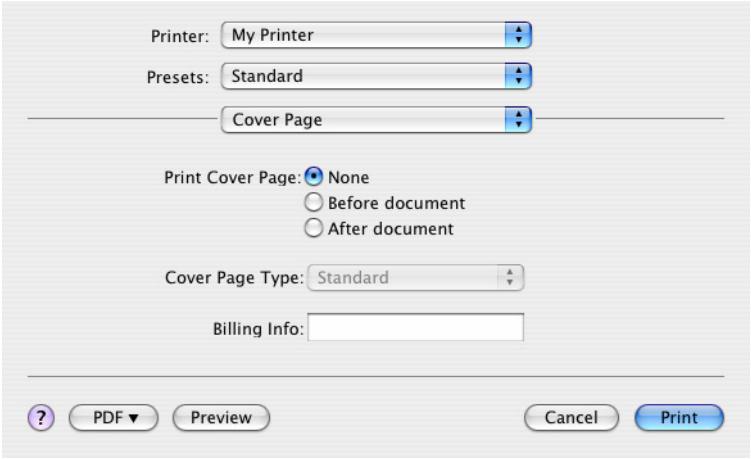

Choosing a cover page may help you to identify your printed document in a large pile of paper. This is useful in a busy office with many people sharing the printer.

Duplex

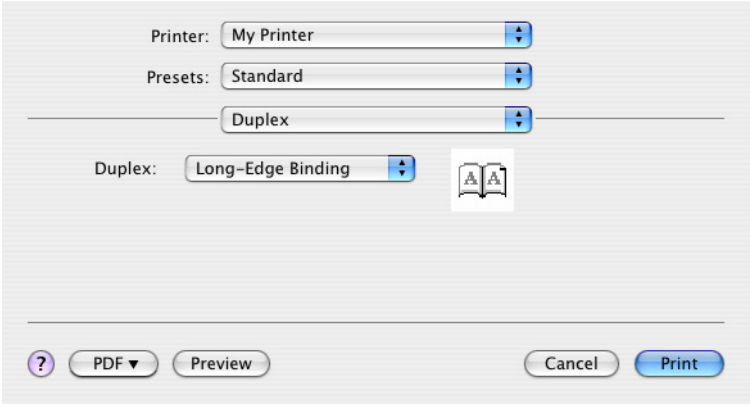

If you have an optional duplex unit fitted to your printer, you can print on both sides of the paper.

Long-Edge Binding prints pages that read like a normal book. **Short-edge Binding** prints pages that read like a notepad.

Paper source

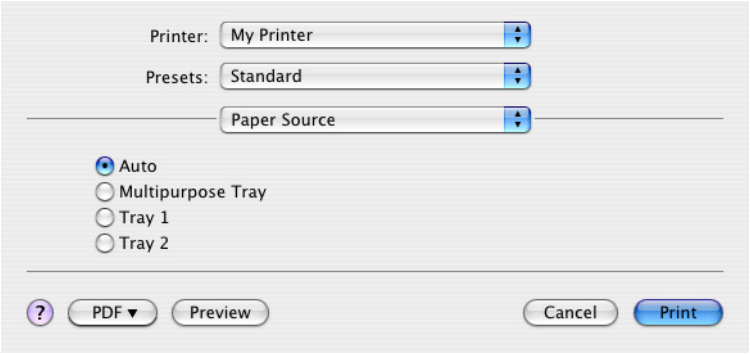

This option allows you to select the paper tray to use for your print job.

Print quality

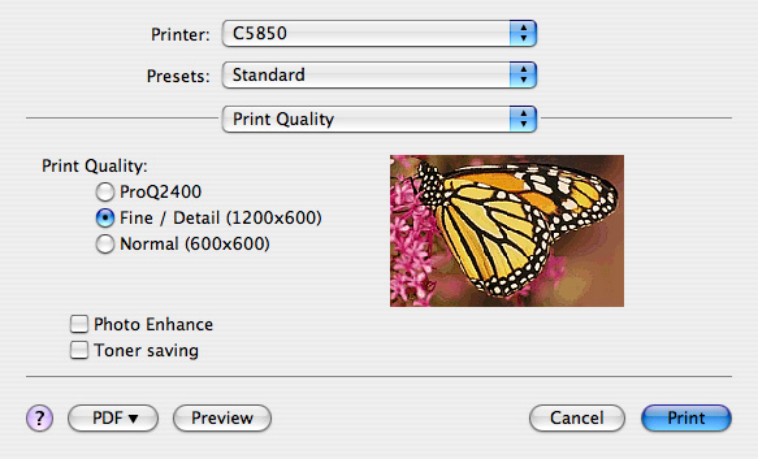

Print quality

Use this option to selects the print resolution. The ProQ2400 setting produces the best graphic images, but these images can take longer to print.

Photo Enhance

Use **Photo Enhance** to significantly improve quality when printing images. The printer driver analyses any photographic images and processes them to improve the overall appearance. This setting cannot be used together with the "ProQ2400" print quality setting.

Toner Saving

Toner saving uses less toner when printing your document. This is best suited to draft text documents as it lightens the print significantly.

Colour

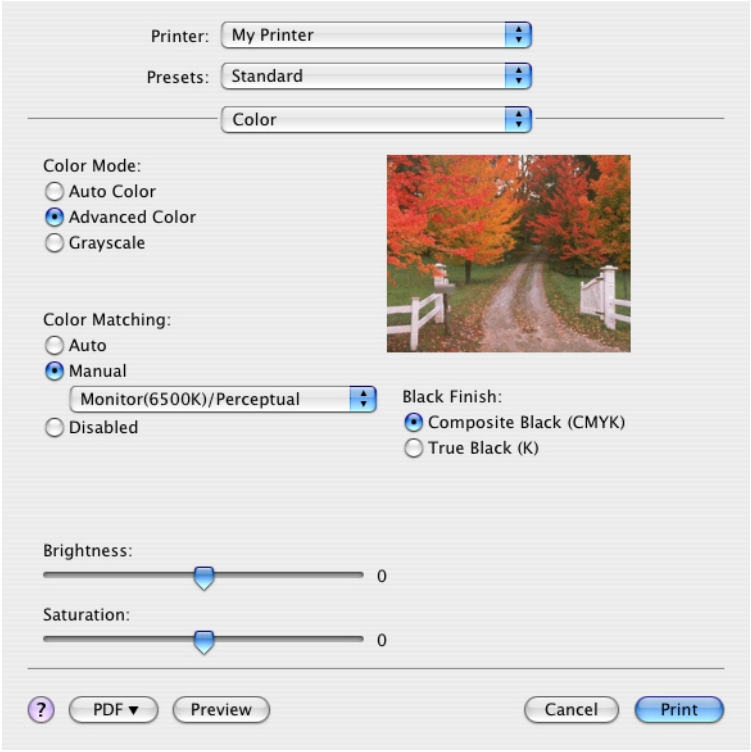

Colour mode

COLOUR MODE	DESCRIPTION
Advanced Colour	The driver selects the most appropriate color settings.
Manual	Allows you to manually adjust colour and black and white settings or select.
Grayscale	Convert all colours to shades of grey.

Color matching

COLOUR	DESCRIPTION
Monitor (6500K) Perceptual	Optimised for printing photos. Colours are printed with emphasis on saturation.
Monitor (6500K) Vivid	Optimised for printing photos, but with even more saturated colours.
Monitor (9300K)	Optimised for printing graphics from applications such as Microsoft Office. Colours are printed with emphasis on Lightness.
Digital Camera	Results will vary depending on the subject and conditions the image was taken.
sRGB	The printer reproduces the sRGB colour space. This might be useful if colour matching from an sRGB input device such as a scanner or digital camera.

Black Finish

Use this option to control the way black is printed in colour documents. Select **Composite Black (CMYK)** to use all 4 toner colours to represent black. This option is recommended for color photos. Select True Black (K) to use 100% black toner to represent black. This option is recommended for text and business graphics.

Brightness / Saturation

This option allows you to increase brightness for a lighter print. Modify saturation to change the strength (or purity) of a colour.

If the printed colours are too strong, reduce saturation and increase brightness. As a general rule, reduce saturation by the same amount as you increase brightness. For example, if you reduce saturation by 10, increase brightness by 10 to compensate.

PRINTER SETUP OPTIONS

Printer options

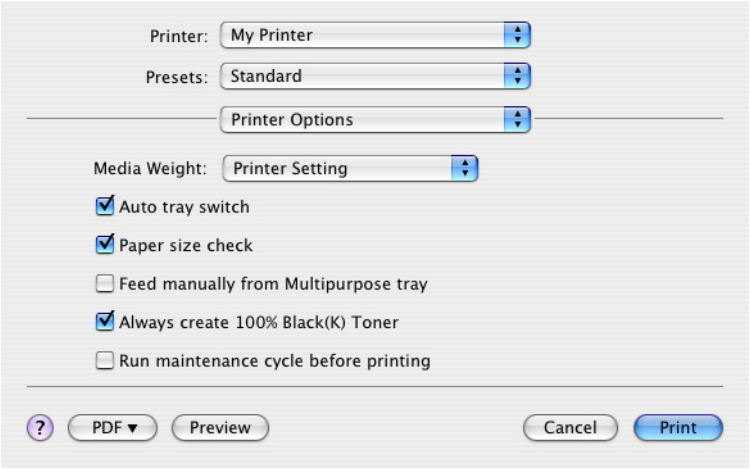

Media weight

Select the thickness or type of paper in the printer. It is important to set this correctly as it affects the temperature at which the toner is fused to the paper. For example, if you are printing on normal A4 paper, do not select Labels or Transparency as this may cause toner smearing and paper jams.

Auto tray switch

If the printer runs out of paper in the current tray, Auto Tray Switch automatically changes to a tray that has the same type of paper and continues printing.

Paper size check

Select Paper Size check if you want the printer to warn you when the document paper size is different from the paper in the printer.

A warning message is displayed and printing continues when you load the correct paper in the paper tray and press **ONLINE**. When this option is deselected, the printer

uses the paper loaded in the selected tray regardless of the document size.

Feed manually from Multipurpose Tray

Select this option if you want the printer to wait until you press the ONLINE button when feeding from the Multipurpose Tray. This can be useful if printing on envelopes.

Always create 100% black (K) toner

Select this option if you want the printer to always use only black (K) toner when printing pure black (RGB = 0,0,0). This is effective even when Composite Black (CMYK) is selected in the colour options.

Run maintenance cycle before printing

Depending on printing habits and usage patterns, running the maintenance cycle before printing may ensure the best possible print quality. This feature uses the printer's image drums and transfer belt. The life of these printer consumables may be shortened if the printer runs a maintenance cycle frequently.

Print control

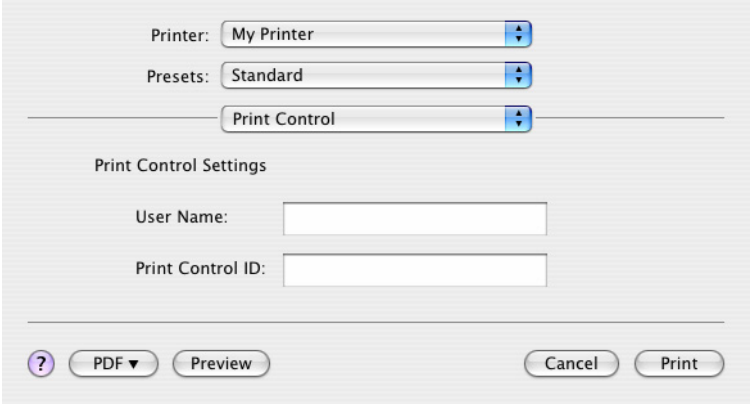

If you are using the Windows Print Control Server software to manage printers, enter your assigned user name and ID. This information is sent to the printer with your print job and is recorded by the printer.

Summary

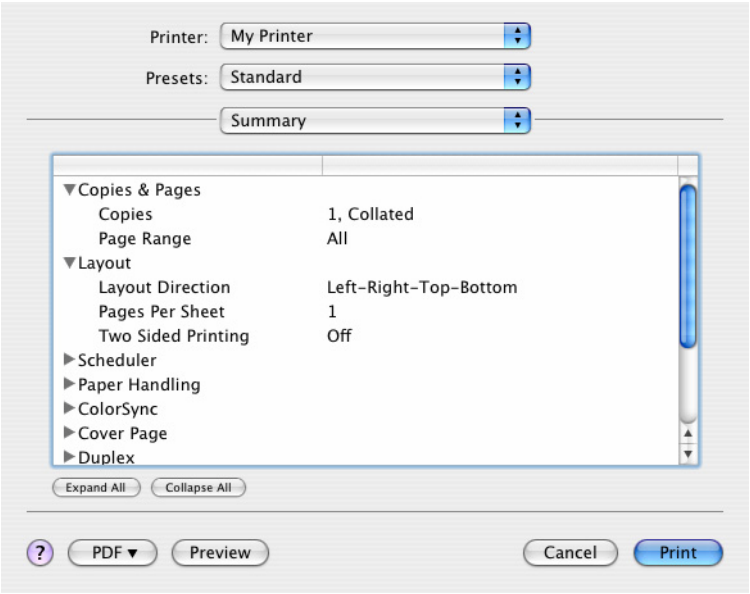

This option displays a summary of all selected print options for the current job.

COLOUR PRINTING

The printer drivers supplied with your printer provide several controls for changing the colour output. For general use the automatic settings will suffice, providing reasonable default settings that will produce good results for most documents.

Many applications have their own colour settings, and these may override the settings in the printer driver. Please refer to the documentation for your software application for details on how that particular program's colour management functions.

FACTORS THAT AFFECT THE APPEARANCE OF PRINTS

If you wish to manually adjust the colour settings in your printer driver, please be aware that colour reproduction is a complex topic, and there are many factors to take into consideration. Some of the most important factors are listed below.

Differences between the range of colours a monitor or printer can reproduce

- Neither a printer nor a monitor is capable of reproducing the full range of colours visible to the human eye. Each device is restricted to a certain range of colours. In addition to this, a printer cannot reproduce all of the colours displayed on a monitor, and vice versa.
- Both devices use very different technologies to represent colour. A monitor uses Red, Green and Blue (RGB) phosphors (or LCDs), a printer uses Cyan, Magenta, Yellow and Black (CMYK) toner or ink.
- A monitor can display very vivid colours such as intense reds and blues and these cannot be easily produced on any printer using toner or ink. Similarly, there are certain colours, (some yellows for example), that can be printed, but cannot be displayed accurately on a monitor. This disparity between monitors and printers is often the main reason that printed colours do not match the colours displayed on screen.

Viewing conditions

A print can look very different under different lighting conditions. For example, the colours in a print may look different when viewed standing next to a sunlit window, compared to how they look under standard office fluorescent lighting.

Printer driver colour settings

The driver settings for manual colour can change the appearance of a print. There are several options available to help match the printed colours with those displayed on screen.

Monitor settings

The brightness and contrast controls on your monitor can change how your document looks on-screen. Additionally, your monitor's colour temperature influences how "warm" or "cool" the colours look.

There are several settings found on a typical monitor:

- 5000k Warmest; yellowish lighting, typically used in graphic art environments.
- 6500k Cooler; approximates daylight conditions.
- 9300k Cool; the default setting for many monitors and television sets.

(k = degrees Kelvin, a measurement of temperature.)

How your software application displays colour

Some graphics applications such as Corel Draw or Adobe Photoshop may display colour differently from "Office" applications such as Microsoft Word. Please see your application's on-line help or user manual for more information.

Paper type

The type of paper used can also significantly affect the printed colour. For example, a printout on recycled paper can look duller than one on specially formulated glossy paper.

TIPS FOR PRINTING IN COLOUR

The following guidelines may help you to achieve good colour output from your printer.

PRINTING PHOTOGRAPHIC IMAGES

Use the Monitor (6500k) Perceptual setting.

If the colours look too dull, try the Monitor (6500k) Vivid or Digital Camera settings.

PRINTING FROM OFFICE APPLICATIONS

Use the Monitor (9300k) setting. This may help if you are having problems with specific colours from applications such as Microsoft Excel or Microsoft PowerPoint.

PRINTING SPECIFIC COLOURS (E.G. A COMPANY LOGO)

There are 2 utilities on your printer driver CD-ROM that can help match specific colours:

Colour Correct Utility

Colour Swatch Utility

ADJUSTING THE BRIGHTNESS OR INTENSITY OF A PRINT

If the print is too light/dark, you can use the Brightness control to adjust it.

If the colours are too intense/not intense enough, use the Saturation control.

ACCESSING THE COLOUR MATCHING OPTIONS

The colour matching options in the printer driver can be used to help match your printed colours to the ones displayed on your monitor or from some other source, such as a digital camera.

To open colour matching options from the Windows Control Panel:

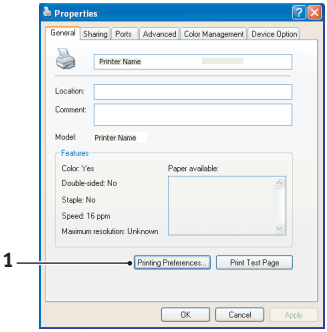

1. Open the **Printers** window (called "Printers and Faxes" in Windows XP).
2. Right-click the printer name and choose **Properties**.
3. Click the **Printing Preferences** button (1).

To open colour matching options from within a Windows application:

1. Choose **File>Print...** from the application's menu bar.
2. Click the **Properties** button next to the printer name.

SETTING THE COLOUR MATCHING OPTIONS

1. On the **Colour** tab select **Advanced Colour** for colour matching.

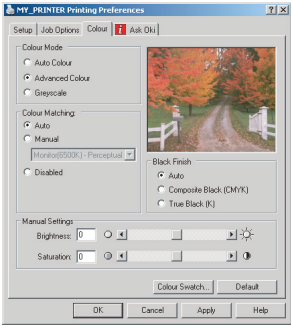

2. Choose the **Natural** colour setting and select from the following options:

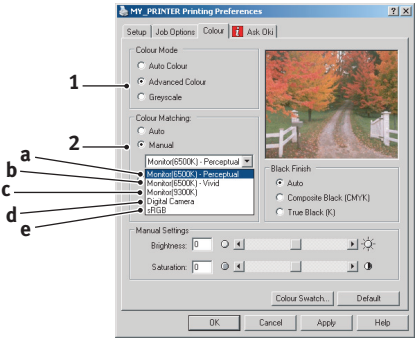

(a) Monitor (6500k) Perceptual

Optimised for printing photographs. Colours are printed with emphasis on saturation.

(b) Monitor (6500k) Vivid

Optimised for printing photographs, but with even more saturated colours than the Monitor (6500k) Perceptual setting.

(c) Monitor (9300k)

Optimised for printing graphics from applications such as Microsoft Office. Colours are printed with emphasis on Lightness.

(d) Digital Camera

Optimised for printing photographs taken with a digital camera.

Your results will vary depending on the subject and the conditions under which the photograph was taken.

(e) sRGB

The printer will try to reproduce the sRGB colour space. This may be useful if colour matching from an sRGB input device such as a scanner or digital camera.

USING THE COLOUR SWATCH FEATURE

To use the Colour Swatch feature, you must install the Colour Swatch Utility. This is supplied on the CD-ROM that was supplied with your printer.

The Colour Swatch function prints charts which contain a range of sample colours. Note that this is not the full range of colours that the printer can produce. Listed on each sample colour are the corresponding RGB (Red, Green, Blue) values. This can be used to pick specific colours in applications that allow you to choose your own RGB values. Simply click the Colour Swatch button (1) and choose from the options available.

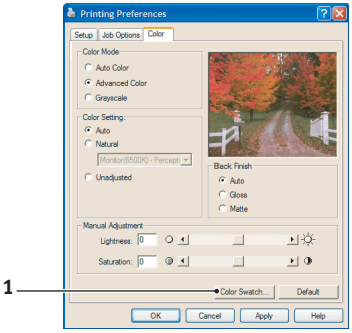

An example of using the colour swatch function:

You wish to print a logo in a particular shade of red. The steps you would follow are:

1. Print a colour swatch, then select the shade of red that best suits your needs.
2. Take a note of the RGB value for the particular shade that you liked.
3. Using your program's colour picker, enter these same RGB values, and change the logo to that colour.

The RGB colour displayed on your monitor may not necessarily match what was printed on the colour swatch. If this is the case, it is probably due to the difference between how your monitor and printer reproduce colour. Here, it is unimportant since your primary objective is to print the required colour.

USING THE COLOUR CORRECT UTILITY

The Oki Colour Correct Utility is provided on your printer driver CD-ROM. You must install it separately since it is not installed along with the printer driver.

The Colour Correct utility has the following features:

- Microsoft Office palette colours can be individually adjusted. This is useful if you want to change how a specific colour is printed.
- Colours can be adjusted by changing Hue, Saturation and Gamma. This is useful if you wish to change the overall colour output.

Once these colour adjustments have been made, the new settings can be selected from the printer driver Colour tab.

To select adjustments made with the Colour Correct Utility:

1. From your application program, click **File** and point to **Print**.
2. Click **Properties**. This displays the printer driver options.
3. Click the **Colour** tab.
4. Click **Advanced Colour**.
5. Click **User Defined**.

Select the colour adjustment you made with the Colour Correct Utility.

MENU FUNCTIONS

This sections lists the menus accessed via the controls on the printer's operator panel and displayed in the LCD window.

OPERATOR PANEL:

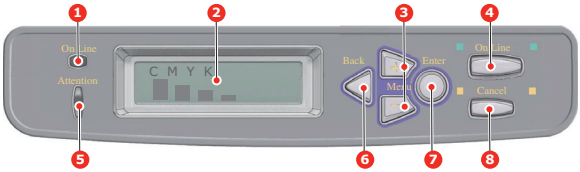

1.ONLINE LED	**ON**:Ready to receive data. **BLINKING**:Processing data. **OFF**: Offline.	**2.DISPLAY**	Displays the printer status and any error messages.
3.MENU Buttons (+/-)	Enters the Menu mode. In Menu mode, forwards or reverses the menu item displayed. Press for 2 secs. or longer to fast forward or reverse.	**4.ONLINE Button**	Switches between ONLINE and OFFLINE. Exits the menu and goes ONLINE when pressed in the Menu mode. Forces printing on the paper currently loaded when pressed with **PAPER SIZE ERROR** displayed.
5.ATTENTION LED	**ON**: A warning occurs. Printing is possible (e.g low toner). **BLINKING**: An error occurs. Printing not possible (e.g. toner empty). **OFF**: Normal condition.	**6.BACK Button**	Returns to the previous higher level menu item.
7.ENTER Button	In the ONLINE or OFFLINE mode: enters the Menu mode. In the Menu mode: determines the setting selected.	**8.CANCEL Button**	Deletes the data being printed or received when pressed for two seconds or longer. Deletes the data when pressed for two seconds or longer with **PAPER SIZE ERROR** or **TRAY X EMPTY** displayed. Exits the menu and goes ONLINE when pressed in the Menu mode.

How to change the settings - User

It should be noted that many of these settings can be, and often are, overridden by settings in the Windows printer drivers. However, several of the driver settings can be left at "Printer Setting", which will then default to the settings entered in these printer menus.

Where applicable, factory default settings are shown in bold type in the following tables.

In the normal operating condition, known as "standby," the printer's LCD window will show **ONLINE**. In this condition, to enter the menu system, press the **+/–** keys on the operator panel to move up and down through the list of menus until the menu you wish to view is displayed. Then proceed as follows:

1. Press **ENTER** to enter the menu.
2. Use the +/– buttons to move up and down through the items in the menu. When the item you want to change is displayed, press **ENTER** to view the sub-menus for that item.
3. Use the +/– buttons to move up and down through the sub-menu items. When the item you want to change is displayed press **ENTER** to display the setting.
4. Use the +/– buttons to move up and down through the available settings for the sub-menu item. When the item you want to change is displayed press **ENTER** to display the setting. An asterisk (*) will appear next to the setting, indicating that this setting is currently in effect.
5. Do one of the following:

   > Press **BACK** again to move up to the list of menus;

   or…

   > Press **ON LINE** or **CANCEL** to exit from the menu system and return to standby.

How to change the settings - Administrator

You can set whether to **ENABLE** or **DISABLE** each category in the user menu.

Disabled categories are not displayed in the User's menu. Only a system administrator can change these settings.

1. Turn **OFF** the printer.
2. Turn **ON** the printer while pressing the **ENTER** button.

   When **ADMIN MENU** appears, take your finger off the button.
3. Press the **ENTER** button.
4. When **ENTER PASSWORD** appears, press the **MENU+** or **MENU-** button several times to display the 1st line of the password and then press the **ENTER** button.
5. Enter your 4- to 9-digit password.

   The default password is aaaaaa.
6. Press the **MENU+** button until the "category" you want to change is displayed.
7. When it is, press the **ENTER** button.
8. Press the **MENU+** button or **MENU-** button until the "item" you want to change is displayed.
9. When it is, press the **ENTER** button.

   Initialization of the flash memory prompts with the message **ARE YOU SURE?**. Confirm whether the change may be executed or not.
10. To execute it, press the **MENU+** button or **MENU-** button to display **YES** and then press the **ENTER** button. The printer automatically reboots.
11. When **PLEASE POW OFF/SHUTDOWN COMP** is displayed, turn the printer **OFF/ON**
12. Press the **MENU+** button or **MENU-** until the "setting" you want is displayed.)
13. Press the **ENTER** button to enter an asterisk (*****) on the right side of the setting selected.
14. Press the **ONLINE** button to switch to **ONLINE**.

MENUS

INFORMATION MENU

This menu provides a quick method of listing various items stored within the printer.

ITEM	ACTION	EXPLANATION
PRINT MENU MAP	EXECUTE	Prints complete menu listing with current settings shown.
NETWORK	EXECUTE	Prints Network configuration information.
DEMO1 DEMO32	EXECUTE	Prints demonstration page containing graphics and text in colour and monochrome.

PRINT MENU

This menu provides adjustment of various print job related functions.

ITEM	SETTINGS	EXPLANATION
COPIES	**1**-999	Enter the number of copies of a document to be printed from 1 to 999.
DUPLEX	ON/**OFF**	Turns the duplex (2-sided) printing function on or off if this feature is installed.
PAPER FEED	**TRAY1** TRAY2 MP TRAY	Selects the default tray for paper feed, Tray 1 (upper), Tray 2 (lower, if installed) or MP Tray (multi purpose tray).
AUTO TRAY SWITCH	**ON** OFF	If two trays contain identical paper, the printer can switch to an alternative source when the current tray runs out in the middle of a print job.
TRAY SEQUENCE	**DOWN** UP PAPER FEED TRAY	Determines tray sequence order when automatically switching.
MP TRAY USAGE	**DO NOT USE** WHEN MISMATCH	If a document to be printed demands a paper size not installed in the selected tray, the printer can automatically feed from the multi purpose tray instead. If this function is not enabled, the printer will stop and request the correct size of paper to be loaded.
MEDIA CHECK	**ENABLE** DISABLE	Determines whether the printer check the size of paper loaded matches that required for the document sent to print.

ITEM	SETTINGS	EXPLANATION
MONO-PRINT SPEED (C5850)	AUTO	If the first page of a print job is black and white, the printer runs at 32ppm (pages per minute). When a colour page is detected the printer slows down to for the rest of that job.
	NORMAL SPEED	This setting operates in the same way as AUTO SPEED, except that the printer runs at 32ppm until a colour page is detected. To achieve this speed the printer requires an additional 10 – 20 seconds to warm up and 30 –60 seconds to cool down when switching to 6ppm for colour pages. This setting is therefore most appropriate when the majority of print jobs are entirely black and white.
	COLOR SPEED	The printer runs at 26ppm for all print jobs. This setting is most appropriate when the majority of print jobs are in colour.
MONO-PRINT SPEED (C5650)	AUTO SPEED	If the first page of a print job is black and white, the printer runs at 32ppm (pages per minute). When a colour page is detected the printer slows down to 22ppm for the rest of that job.
	MONO 32PPM	This setting operates in the same way as AUTO SPEED, except that the printer runs at 32ppm until a colour page is detected. To achieve this speed the printer requires an additional 10 – 20 seconds to warm up and 30 –60 seconds to cool down when switching to 22ppm for colour pages. This setting is therefore most appropriate when the majority of print jobs are entirely black and white.
	COLOR SPEED	The printer runs at 22ppm for all print jobs. This setting is most appropriate when the majority of print jobs are in colour.
	MIXED SPEED	The printer runs at 26ppm for all print jobs.

MEDIA MENU

This menu provides adjustment to suit a wide range of print media.

ITEM	SETTINGS	EXPLANATION
TRAY1 PAPERSIZE	**A4 /** A5 / A6 / B5 LEGAL14 LEGAL13.5 LEGAL13 LETTER EXECUTIVE CUSTOM	Selects the size of paper loaded in Tray 1 (upper tray if both trays installed). For CUSTOM setting see X-DIMENSION and Y-DIMENSION later in this table.
TRAY1 MEDIATYPE	**PLAIN** LETTERHEAD BOND RECYCLED ROUGH GLOSSY USERTYPE1 USERTYPE2 USERTYPE3 USERTYPE4 USERTYPE5	Selects the type of media loaded in this tray. This will help the printer to adjust its internal operating parameters, such as engine speed and fusing temperature, to better accommodate the media to be fed. For example, letterhead may benefit from a slightly lower fusing temperature to ensure that its ink does not offset. USERTYPE1~5 are only displayed if they are registered in the host PC
TRAY1 MEDIAWEIGHT	LIGHT **MEDIUM** HEAVY	Adjusts the printer for the weight of paper stock loaded in thus tray.
TRAY2 PAPERSIZE	**A4** / A5 / B5 / LEGAL14 LEGAL13.5 LEGAL13 LETTER EXECUTIVE CUSTOM	Selects the size of paper loaded in Tray 2 (lower) if installed. For CUSTOM setting see X-DIMENSION and Y-DIMENSION later in this table.
TRAY2 MEDIATYPE	**PLAIN** LETTERHEAD BOND RECYCLED ROUGH GLOSSY USERTYPE1 USERTYPE2 USERTYPE3 USERTYPE4 USERTYPE5	Selects the type of media loaded in this tray (if installed). USERTYPE1~5 are only displayed if they are registered in the host PC

ITEM	SETTINGS	EXPLANATION
TRAY2 MEDIAWEIGHT	LIGHT **MEDIUM** HEAVY ULTRA HEAVY	Adjusts the printer for the weight of paper stock loaded in this tray (if installed).
MPT PAPERSIZE	LETTER EXECUTIVE LEGAL14 LEGAL13.5 LEGAL13 **A4** / A5 / A6 / B5 CUSTOM COM-9 ENVELOPE COM-10 ENVELOPE MONARCH ENV DL ENVELOPE C5 ENVELOPE INDEX CARD	Selects the size of paper to be fed from the multi purpose tray. For CUSTOM setting see X-DIMENSION and Y-DIMENSION later in this table.
MPT MEDIATYPE	**PLAIN** LETTERHEAD TRANSPARENCY LABELS BOND RECYCLED CARD STOCK ROUGH GLOSSY USERTYPE1 USERTYPE2 USERTYPE3 USERTYPE4 USERTYPE5	Selects the type of media to be fed from the multi purpose tray so that the printer can adjust its internal parameters to better accommodate the selected type of media. USERTYPE1~5 are only displayed if they are registered in the host PC
MPT MEDIAWEIGHT	LIGHT **MEDIUM** HEAVY ULTRA HEAVY	Selects the media weight to be fed from the multi purpose tray.
UNIT OF MEASURE	**MILLIMETRE** INCH	Selects the unit of measure for the next two items.
X-DIMENSION	100-**210**-216 MILLIMETRE	Selects the width of paper defined by the "CUSTOM" settings referred to in the foregoing PAPER SIZE settings.

ITEM	SETTINGS	EXPLANATION
Y-DIMENSION	148-**297**-1200 MILLIMETRE	Selects the length of paper defined by the "Custom" settings referred to in the foregoing PAPER SIZE settings. Note that media of up to 1200mm in length can be fed from the multi purpose tray for banner printing.

COLOUR MENU

The printer automatically adjusts colour balance and density at appropriate intervals, optimising the printed output for bright white paper viewed in natural daylight conditions. The items on this menu provide a means of changing the default settings for special or particularly difficult print jobs. Settings revert to their default values when the next print job is complete.

ITEM	SETTINGS	EXPLANATION
DENSITY CONTROL	**AUTO** MANUAL	If set to AUTO, image density will be automatically adjusted at power on, when a new image drum or toner cartridge is installed, and at intervals of 100, 300 and 500 drum counts. If a 500 drum count interval occurs during a print job it will occur at the end of that job, and will take up to 55 seconds. If set to manual, this adjustment will only be performed when initiated by the next menu item.
ADJUST DENSITY	EXECUTE	Selecting this will permit adjustment of the colour density.
AJST REGISTRATION	EXECUTE	Performs automatic colour registration adjustment. Normally this is done on power on and when the top cover is opened and then closed. This process accurately aligns the cyan, magenta and yellow images to the black image.
C REG FINE AJST M REG FINE AJST Y REG FINE AJST	-3~**0**~+3 -3~**0**~+3 -3~**0**~+3	Performs fine adjustment of image timing in relation to the black image component.

SYSTEM CONFIGURATION MENU

This menu adjusts general printer settings to suit the way you prefer to work.

ITEMS	SETTINGS	EXPLANATION
POW SAVE TIME	5 15 30 **60** 240	Adjusts the idling time before the printer automatically switches into power saving mode. In this mode power consumption is reduced to a low level required to just keep the printer operating and ready to receive data. When a job is sent the printer will require a warm-up time of up to 1 minute before printing can begin.
CLRABLE WARNING	**ON** JOB	When ON, non-critical warnings, such as requests for a different paper size, can be cleared by pressing the **ON LINE** button. When set to JOB, they are cleared when the print job resumes.
MANUAL TIMEOUT	OFF 30 **60**	Specifies how many seconds the printer will wait for paper to be fed before cancelling the job.
WAIT TIMEOUT	5~**90**~300	Specifies how many seconds the printer will wait when received data pauses before forcing a page eject. In PostScript Emulation mode the job will be cancelled if timeout occurs.
LOW TONER	**CONTINUE** STOP	Specifies whether the printer should continue printing even after a low toner condition is detected.
JAM RECOVERY	**ON** OFF	Specifies whether the printer should perform jam recovery after a paper jam has occurred. If ON, the printer will attempt to print again any pages lost due to a paper jam once the jam has been cleared.
ERROR REPORT	ON **OFF**	If **ON**, the printer will print error details when a PostScript Emulation error occurs.

USB MENU

This menu controls the operation of the printer's USB data interface.

ITEM	SETTINGS	EXPLANATION
SOFT RESET	ENABLE / **DISABLE**	Enables or disables the SOFT RESET command.
SERIAL NUMBER	ENABLE / **DISABLE**	Sets the maximum USB I/F transfer speed
SPEED	12 / **480** Mps	Selects the interface speed

NETWORK MENU

This menu controls the operation of the printer's 10Base-T/ 100Base-TX network interface.

ITEM	SETTINGS	EXPLANATION
TCP/IP	**ENABLE** / DISABLE	Enables or disables this network protocol.
NETBEUI	**ENABLE** / DISABLE	Enables or disables this network protocol.
IP ADDRESS SET	AUTO / MANUAL	Specifies whether IP address allocation is automatic (DHCP) or manually assigned.
IP ADDRESS	xxx.xxx.xxx.xxx	Current assigned IP address. To change, press **ENTER** and use **+**/**−** keys to increment 1st octet, then press **ENTER** again to move on to next octet. When 4th octet has been set, press **ENTER** again to register new address.
SUBNET MASK	xxx.xxx.xxx.xxx	Current assigned subnet mask. To change, proceed as above.
GATEWAY ADDRESS	xxx.xxx.xxx.xxx	Current assigned gateway address. To change, proceed as above.
FACTORY DEFAULTS	EXECUTE	Reloads the settings present when the unit was setup by the manufacturer.
WEB	**ENABLE** / DISABLE	Enables or disables Web config. facility.

ITEM	SETTINGS	EXPLANATION
TELNET	ENABLE / **DISABLE**	Enables or disables Telnet config. facility.
FTP	**ENABLE** / DEFAULT	Enables or disables communication via FTP.
SNMP	**ENABLE** / DISABLE	Enables or disables SNMP protocol.
NETWORK SCALE	**NORMAL** / SMALL	Selects network size.
HUB LINK SETTING	**AUTO NEGOTIATE** 100BASE-TX FULL 100BASE-TX HALF 10BASE-T FULL 10BASE-T HALF	Sets full or half duplex for communication via a network hub.

MEMORY MENU

Not displayed as default. This menu is displayed only when set to **ENABLE** in **OP MENU** of **Administrator menu.**

ITEM	SETTINGS	EXPLANATION
RECEIVE BUF SIZE	**AUTO** 0.5 MB 1.0 MB 2.0 MB 4.0 MB 8.0 MB 16.0 MB 32.0 MB	Sets the size of the receive buffer

SYS ADJUST MENU

Not displayed as default. This menu is displayed only when set to **ENABLE** in **OP MENU** of **Administrator me**nu.

ITEM	SETTINGS	EXPLANATION
X ADJUST	+2.0mm ~ **0** ~ -2.0mm	Adjusts the position of a whole print image in the direction perpendicular to the direction the paper runs, that is horizontally, in 0.25 mm increments. Any parts of the print image that are outside the printable area as a result of this shift will be cropped.
Y ADJUST	+2.0mm ~ **0** ~ -2.0mm	Adjusts the position of a whole print image in the direction the paper runs, that is vertically, in 0.25 mm increments. Any parts of the print image that are outside the printable area as a result of this shift will be cropped. Corrections in a negative value are ignored in PS mode.
DUPLEX X ADJUST	+2.0mm ~ **0** ~ -2.0mm	If the Duplex option is installed, when printing the reverse page of a duplex job, adjusts the position of the whole print image in the direction that is perpendicular to the direction the paper runs, that is horizontally, in 0.25 mm increments. Any parts of the print image that are outside the printable area as a result of this shift will be cropped.
DUPLEX Y ADJUST	+2.0mm ~ **0** ~ -2.0mm	If the Duplex option is installed, when printing the reverse page of a duplex job, adjusts the position of the whole print image in the direction the paper runs, that is vertically, in 0.25 mm increments. Any parts of the print image that are outside the printable area as a result of this shift will be cropped. Corrections in a negative value are ignored in PS mode.
DRUM CLEANING	ON **OFF**	Sets whether to rotate the drum in idle prior to printing in order to reduce any horizontal white lines. **CAUTION: Each additional rotation will shorten the Image Drum life by that amount.**

MAINTENANCE MENU

This menu provides access to various printer maintenance functions.

ITEM	SETTINGS	EXPLANATION
MENU RESET	EXECUTE	Resets menu to factory default settings.
SAVE MENU	EXECUTE	Saves current menu settings as default values. At confirmation prompt, press **ENTER** to confirm save, or **CANCEL** to cancel.
RESTORE MENU	EXECUTE	Resets menu to the settings saved.
POWER SAVE	**ENABLE** / DISABLE	Enables or disables automatic power save mode. Delay before entering this mode is set in the system configuration menu.
PAPER BLACK SET	–2~**0**~+2	Used for small adjustment when you experience faded print or light specks / streaking in monochrome printing on white paper. Select a higher value to reduce fading, or a lower value to reduce specks or streaking in high density print areas.
PAPER COLOR SET	–2~**0**~+2	As above, but for colour printing.
TRANSPR BLACK SET	–2~**0**~+2	As above but for mono printing on transparencies.
TRANSPR COLOR SET	–2~**0**~+2	As above but for colour printing on transparencies.
SMR STTING	–2~**0**~+2	Sets a correction value for uneven print quality, to correct print variations caused by variations in temperature and humidity or in print density/ frequency.
BG SETTING	–3~**0**~+3	Sets a correction value for dark-coloured paper printing, to correct print variations caused by variations in temperature and humidity or in print density/frequency.

USAGE MENU

This menu is for information only, and provides an indication of total usage of the printer and the expected life left in its consumable items. This is particularly useful if you do not have a full set of replacement consumables to hand and you need to know how soon you will need them.

ITEM	EXPLANATION
TOTAL PAGE COUNT	Displays the total number of pages printed (excluding any pages that have jammed). Note: in Duplex printing, a sheet is counted as 2 pages, thus the total page count may not necessarily equal the number of pages printed from each tray.
TRAYn PAGE COUNT	The total number of pages fed from tray n.
MPT PAGE COUNT	The total number of pages fed from the multi purpose tray.
COLOR PAGE COUNT	The total number of pages printed in colour (excluding any pages that have jammed or jobs that have been cancelled).
MONO PAGE COUNT	The total number of pages printed in monochrome (excluding any pages that have jammed or jobs that have been cancelled).
K DRUM LIFE REMAINING C DRUM LIFE REMAINING M DRUM LIFE REMAINING Y DRUM LIFE REMAINING	Percentage of life remaining in these consumable items.
BELT LIFE REMAINING	Percentage of belt life remaining.
FUSER LIFE REMAINING	Percentage of fuser life remaining.
K TONER C TONER M TONER Y TONER	Cartridge size and current toner level.

ADMINISTRATOR MENU

This menu is only accessible to System Administrators. In order to gain access to this menu, hold down the **ENTER** button whilst turning the printer **ON**.

This menu is in **ENGLISH** only.

ITEM	SETTINGS	EXPLANATION
ENTER PASSWORD	xxxxxxxxxxxx	Enter a password to gain entry to the Admin menu. Password should be from 6 to 12 digits of alpha/numeric characters (or mix) The default value is "aaaaaa" The printer will restart after the ADMIN MENU.
OP MENU/ ALL CATEGORY	**ENABLE** DISABLE	Set up ENABLE/DISABLE condition for all categories in USERS MENU. If DISABLE is selected, USERS MENU, except PRINTJOB MENU, will not appear.
OP MENU/ INFORMATION MENU	**ENABLE** DISABLE	Set up ENABLE/DISABLE condition for INFORMATION MENU category. If DISABLE is selected, INFORMATION MENU category of USERS MENU will not appear.
OP MENU SHUTDOWN MENU	**ENABLE** DISABLE	Set up ENABLE/DISABLE condition for SHUTDOWN MENU category. If DISABLE is selected, SHUTDOWN MENU category of USERS MENU will not appear.
OP MENU PRINT MENU	**ENABLE** DISABLE	Set up ENABLE/DISABLE condition for PRINT MENU category. If DISABLE is selected, PRINT MENU category of USERS MENU will not appear.
OP MENU MEDIA MENU	**ENABLE** DISABLE	Set up ENABLE/DISABLE condition for MEDIA MENU category. If DISABLE is selected, MEDIA MENU category of USERS MENU will not appear.
OP MENU/ COLOR MENU	**ENABLE** DISABLE	Set up ENABLE/DISABLE condition for COLOR MENU category. If DISABLE is selected, COLOR MENU category of USERS MENU will not appear.

ITEM	SETTINGS	EXPLANATION
OP MENU/ SYS CONFIG MENU	**ENABLE** DISABLE	Set up ENABLE/DISABLE condition for SYS.CONFIG MENU category. If DISABLE is selected, SYS.CONFIG MENU category of USERS MENU will not appear.
OP MENU/ USB MENU	**ENABLE** DISABLE	Set up ENABLE/DISABLE condition for USB MENU category. If DISABLE is selected, USB MENU category of USERS MENU will not appear.
OP MENU/ NETWORK MENU	**ENABLE** DISABLE	Set up ENABLE/DISABLE condition for NETWORK MENU category. If DISABLE is selected, NETWORK MENU category of USERS MENU will not appear.
OP MENU/ MEMORY MENU	**ENABLE** DISABLE	Set up ENABLE/DISABLE condition for MEMORY MENU category. If DISABLE is selected, MEMORY MENU category of USERS MENU will not appear.
OP MENU/ SYS ADJUST MENU	**ENABLE** DISABLE	Set up ENABLE/DISABLE condition for SYS.ADJUST MENU category. If DISABLE is selected, SYS.ADJUST MENU category of USERS MENU will not appear.
OP MENU/ MAINTENCE MENU	**ENABLE** DISABLE	Set up ENABLE/DISABLE condition for MAINTENACE MENU category. If DISABLE is selected, MAINTENANCE MENU category of USERS MENU will not appear.
OP MENU/ USAGE MENU	**ENABLE** DISABLE	Set up ENABLE/DISABLE condition for USAGE MENU category. If DISABLE is selected, USAGE MENU category of USERS MENU will not appear.
CONFIG. MENU/ NEARLIFE LED	**ENABLE** DISABLE	Enables/disables illumination of front panel LED when “near-end-of-life” warning of a toner, drum, fuser, or belt occurs. Attention LED is lit when setting is enabled, inhibited when disabled.

ITEM	SETTINGS	EXPLANATION
FILE SYS MAINTE1/FLASH INITIALIZE	EXECUTE	Initialises the resident FLASH MEMORY. If **NO** is selected, the machine will go back to the source menu. If **YES** is selected, the machine will be automatically rebooted and initialize the FLASH memory.
FILE SYS MAINTE2/ INITIAL LOCK	**YES** NO	If **YES** is selected, you will not be able to select "ADMIN MENU" - "FILE SYS MAINTE1" (above).
CHANGE PASSWORD/ NEW PASSWORD	xxxxxxxxxxxx	Set a new password for entering the administrator's menu. Password should be from 6 to 12 digits of alpha/numeric characters (or mix) The default value is "aaaaaa" The printer will restart after the ADMIN MENU.
CHANGE PASSWORD/ VERIFY PASSWORD	xxxxxxxxxxxx	Verification of above.

FACTORY DEFAULT SETTINGS

CATEGORY	ITEM	DEFAULT
PRINT MENU	COPIES	1
	PAPER FEED	TRAY1
	AUTO TRAY SWITCH	ON
	TRAY SEQUENCE	DOWN
	MP TRAY USAGE	DO NOT USE
	MEDIA CHECK	ENABLE
	MONO-PRINT SPEED	AUTO
MEDIA MENU	TRAY1 PAPERSIZE	A4
	TRAY1 MEDIATYPE	PLAIN
	TRAY1 MEDIAWEIGHT	MEDIUM
	TRAY2 PAPERSIZ	A4
	TRAY2 MEDIATYPE	PLAIN
	TRAY2 MEDIAWEIGHT	MEDIUM
	MPT PAPERSIZE	A4
	MPT MEDIATYPE	PLAIN
	MPT MEDIAWEIGHT	MEDIUM
	UNIT OF MEASURE	MILLIMETER
	X DIMENSION	210 mm
	Y DIMENSION	297 mm
COLOR MENU	DENSITY	AUTO
	C REG FINE AJST	0
	M REG FINE AJST	0
	Y REG FINE AJST	0
SYS CONFIG MENU	POW SAVE TIME	60 MIN
	CLRABLE WARNING	ONLINE

CATEGORY	ITEM	DEFAULT
SYS CONFIG MENU (continued)	MANUAL TIMEOUT	60 secs.
	WAIT TIMEOUT	90 secs.
	LOW TONER	CONTINUE
	JAM RECOVERY	ON
	ERROR REPORT	OFF
USB MENU	SOFT RESET	DISABLE
	SPEED	480mps
	SERIAL NUMBER	ENABLE
NETWORK MENU	TCP/IP	ENABLE
	NETBEUI	DISABLE
	IP ADDRESS SET	AUTO
	IP ADDRESS	169.254.xxx.xxx / 192.168.100.100
	SUBNET MASK	255.255.0.0 / 255.255.255.0
	GATEWAY ADDRESS	0.0.0.0
	WEB	
	TELNET	ENABLE
	FTP	DISABLE
	SNMP	DISABLE
	NETWORK SCALE	NORMAL
	HUB LINK SETTING	AUTO NEGOTIATE
MEMORY MENU	RECEIVE BUF SIZE	AUTO
SYS ADJUST MENU	X ADJUST	0.00mm
	Y ADJUST	0.00mm
	DUPLEX X ADJUST	0.00mm
	DUPLEX Y ADJUST	0.00mm

CATEGORY	ITEM	DEFAULT
SYS ADJUST MENU (continued)	DRUM CLEANING	OFF
MAINTENANCE MENU	POWER SAVE	ENABLE
	PAPER BLACK SET	0
	PAPER COLOR SET	0
	TRNSPR BLACK SET	0
	TRNSPR COLOR SET	0
	SMR SETTING	0
	BG SETTING	0

REPLACING CONSUMABLE ITEMS

This section explains how to replace consumable items when due. As a guide, the life expectancy of these items is:

TONER:

STARTER CARTRIDGE:

The machine is shipped with sufficient Black, Cyan, Magenta & Yellow toner for 2,250 A4 pages, of which 750 A4 pages of toner are used to initially charge the image drum (1,500 A4 pages remaining at 5% coverage).

REPLACEMENT CARTRIDGE:

A4 PAGE COVERAGE (OF THIS COLOUR)		2.5%	5.0%	10%
Black	C5650	16,000	8,000	4,000
	C5850	16,000	8,000	4,000
Cyan	C5650	4,000	2,000	1,000
	C5850	12,000	6,000	3,000
Magenta	C5650	4,000	2,000	1,000
	C5850	12,000	6,000	3,000
Yellow	C5650	4,000	2,000	1,000
	C5850	12,000	6,000	3,000

IMAGE DRUM:

Approximately 20,000 pages (calculated on typical office usage where 20% of printing is 1 page only, 30% is 3 page documents and 50% is print runs of 15 pages or more).

TRANSFER BELT:

Approximately 60,000 A4 pages.

FUSER:

Approximately 60,000 A4 pages.

CONSUMABLE ORDER DETAILS

ITEM	LIFE	ORDER NO.
Toner, C5850, black	8,000 A4 @ 5%*	43865724
Toner, C5850, cyan	6,000 A4 @ 5%*	43865723
Toner, C5850, magenta	6,000 A4 @ 5%*	43865722
Toner, C5850, yellow	6,000 A4 @ 5%*	43865721
Toner, C5650, black	8,000 A4@ 5%*	43865708
Toner, C5650, cyan	2,000 A4@ 5%*	43872307
Toner, C5650, magenta	2,000 A4@ 5%*	43872306
Toner, C5650, yellow	2,000 A4@ 5%*	43872305
Image drum, C5850, black	20,000 A4 pages*	43870024
Image drum, C5850, cyan	20,000 A4 pages*	43870023
Image drum, C5850, magenta	20,000 A4 pages*	43870022
Image drum, C5850,yellow	20,000 A4 pages*	43870021
Image drum, C5650, black	20,000 A4 pages*	43870008
Image drum, C5650, cyan	20,000 A4 pages*	43870007
Image drum, C5650, magenta	20,000 A4 pages*	43870006
Image drum, C5650, yellow	20,000 A4 pages*	43870005
Fuser	60,000 A4 pages*	43853103
Transport belt	60,000 A4 @ 3/job	43347602

* Average life: 20% pages at continuous print, 50% pages at 3 pages per job and 30% pages at 1 page per job.

Only use genuine Oki Original consumables to ensure the best quality and performance from your hardware. Non Oki Original products may adversely affect your printer's performance and invalidate your warranty.

TONER CARTRIDGE REPLACEMENT

NOTE
When the LCD display indicates TONER LOW, or if print appears faded, first open the top cover and try tapping the cartridge a few times to evenly distribute the toner powder. This will enable you to obtain the best "yield" from your toner cartridge.

CAUTION!

To avoid toner wastage and possible toner sensor errors, do not change the toner cartridge(s) until "TONER EMPTY" is displayed.

The toner used in this printer is a very fine dry powder. It is contained in four cartridges: one each for cyan, magenta, yellow and black.

Have a sheet of paper handy so that you have somewhere to place the used cartridge while you install the new one.

Dispose of the old cartridge responsibly, inside the pack that the new one came in. Follow any regulations, recommendations, etc., which may be in force concerning waste recycling.

If you do spill any toner powder, lightly brush it off. If this is not enough, use a cool, damp cloth to remove any residue.

Do not use hot water, and never use solvents of any kind. They will make stains permanent.

WARNING!

If you inhale any toner or get it in your eyes, drink a little water or bathe your eyes liberally in cold water. Seek medical attention immediately.

1. Press the cover release and open the printer's top cover fully.

WARNING!

If the printer has been powered on, the fuser may be hot. This area is clearly labelled. Do not touch.

2. Note the positions of the four cartridges.

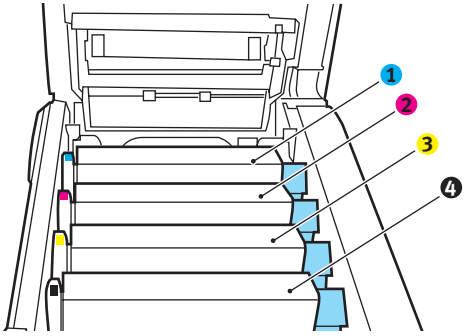

1. Cyan cartridge	2. Magenta cartridge
3. Yellow cartridge	4. Black cartridge

(a) Pull the coloured toner release lever (1) on the cartridge to be replaced fully towards the front of the printer.

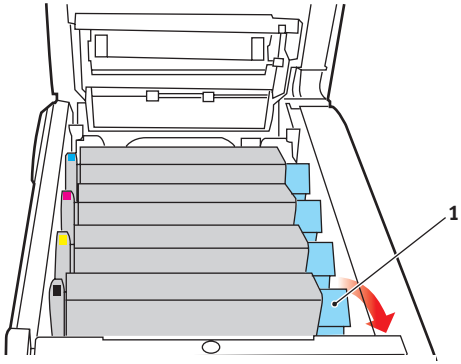

3. Lift the right-hand end of the cartridge and then draw the cartridge to the right to release the left-hand end as shown, and withdraw the toner cartridge out of the printer.

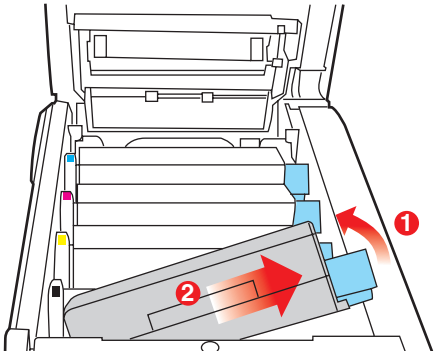

4. Put the cartridge down gently onto a piece of paper to prevent toner from marking your furniture.

5. Remove the new cartridge from its box but leave its wrapping material in place for the moment.

6. Gently shake the new cartridge from end to end several times to loosen and distribute the toner evenly inside the cartridge.

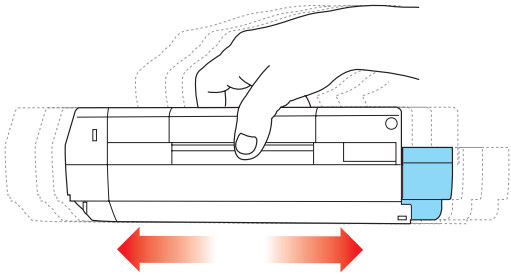

7. Remove the wrapping material and peel off the adhesive tape from the underside of the cartridge.

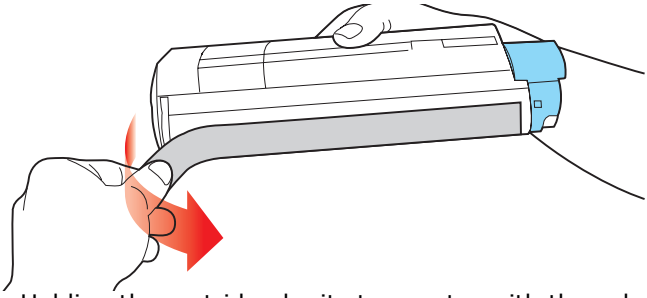

8. Holding the cartridge by its top centre with the coloured lever to the right, lower it into the printer over the image drum unit from which the old cartridge was removed.

9. Insert the left end of the cartridge into the top of the image drum unit first, pushing it against the spring on the drum unit, then lower the right end of the cartridge down onto the image drum unit.

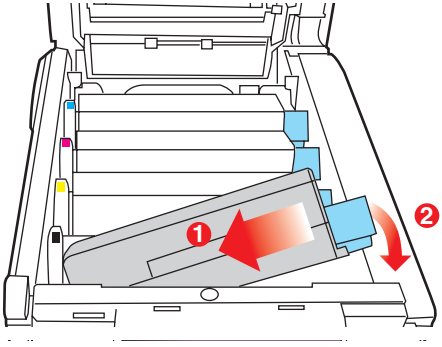

10. Pressing gently down on the cartridge to ensure that it is firmly seated, push the coloured lever (1) towards the rear of the printer. This will lock the cartridge into place and release toner into the image drum unit.

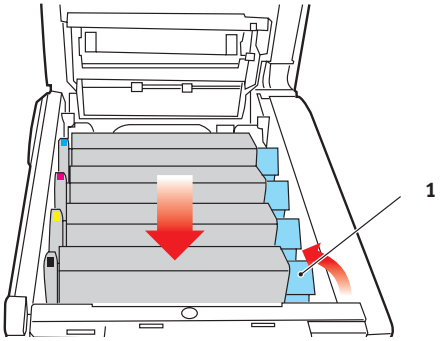

11. Finally, close the top cover and press down firmly at both sides so that the cover latches closed.

IMAGE DRUM REPLACEMENT

CAUTION!

Static sensitive devices, handle with care.

The printer contains four image drums: cyan, magenta, yellow and black.

1. Press the cover release and open the printer's top cover fully.

WARNING!

If the printer has been powered on, the fuser will be hot. This area is clearly labelled. Do not touch.

2. Note the positions of the four cartridges.

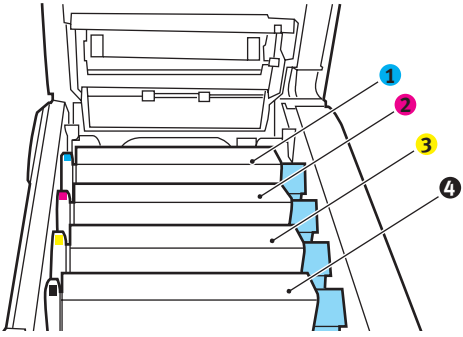

1. Cyan cartridge	2. Magenta cartridge
3. Yellow cartridge	4. Black cartridge

3. Holding it by its top centre, lift the image drum, complete with its toner cartridge, up and out of the printer.

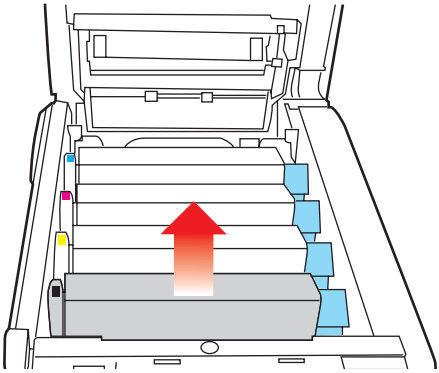

4. Put the cartridge down gently onto a piece of paper to prevent toner from marking your furniture and to avoid damaging the green drum surface.

CAUTION!

The green image drum surface at the base of the cartridge is very delicate and light sensitive. Do not touch it and do not expose it to normal room light for more than 5 minutes. If the drum unit needs to be out of the printer for longer than this, please wrap the cartridge inside a black plastic bag to keep it away from light. Never expose the drum to direct sunlight or very bright room lighting.

5. With the coloured toner release lever (1) to the right, pull the lever towards you. This will release the bond between the toner cartridge and the image drum cartridge.

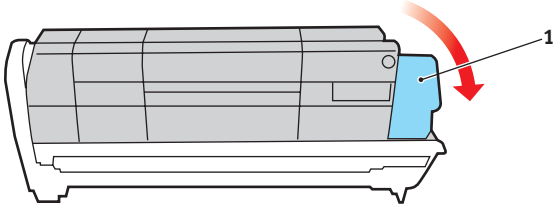

6. Lift the right-hand end of the cartridge and then draw the cartridge to the right to release the left-hand end as shown, and withdraw the toner cartridge out of the image drum cartridge. Place the cartridge on a piece of paper to avoid marking your furniture.

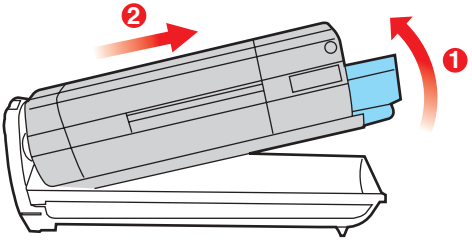

7. Take the new image drum cartridge out of its packaging and place it on the piece of paper where the old cartridge was placed. Keep it the same way round as the old unit. Pack the old cartridge inside the packaging material for disposal.

8. Place the toner cartridge onto the new image drum cartridge as shown. Push the left end in first, and then lower the right end in. (It is not necessary to fit a new toner cartridge at this time unless the remaining toner level is very low.)

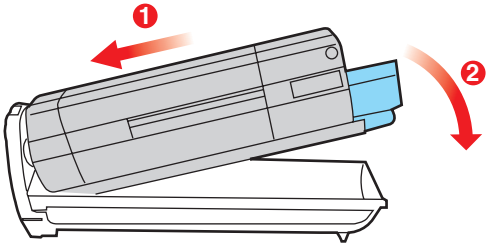

9. Push the coloured release lever (1) away from you to lock the toner cartridge onto the new image drum unit and release toner into it.

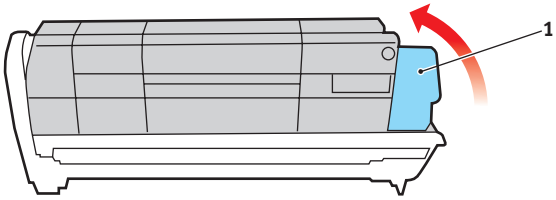

10. Holding the complete assembly by its top centre, lower it into place in the printer, locating the pegs at each end into their slots in the sides of the printer cavity.

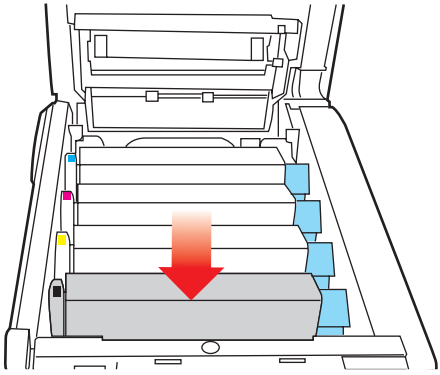

11. Finally, close the top cover and press down firmly at both sides so that the cover latches closed.

NOTE
If you need to return or transport your printer for any reason, please make sure you remove the image drum unit beforehand and place in the bag provided. This is to avoid toner spillage.

REPLACING THE BELT UNIT

The belt unit is located under the four image drums. This unit requires replacement approximately every 60,000 pages.

Switch off the printer and allow the fuser to cool for about 10 minutes before opening the cover.

1. Press the cover release and open the printer's top cover fully.

WARNING!

If the printer has been powered on, the fuser will be hot. This area is clearly labelled. Do not touch.

2. Note the positions of the four cartridges. It is essential that they go back in the same order

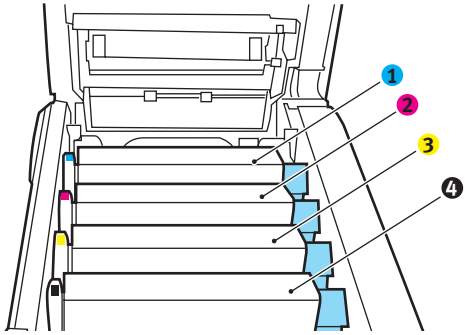

1. Cyan cartridge	2. Magenta cartridge
3. Yellow cartridge	4. Black cartridge

3. Lift each of the image drum units out of the printer and place them in a safe place away from direct sources of heat and light.

CAUTION!

The green image drum surface at the base of each cartridge is very delicate and light sensitive. Do not touch it and do not expose it to normal room light for more than 5 minutes. If the drum unit needs to be out of the printer for longer than this, please wrap the cartridge inside a black plastic bag to keep it away from light. Never expose the drum to direct sunlight or very bright room lighting.

4. Locate the two fasteners (5) at each side of the belt and the lifting bar (6) at the front end.

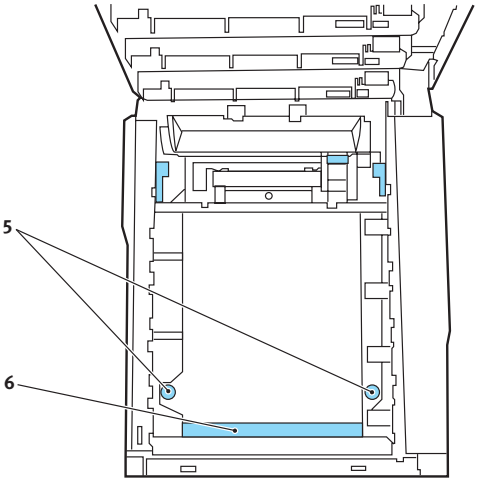

5. Turn the two fasteners 90° to the left. This will release the belt from the printer chassis.

6. Pull the lifting bar (6) upwards so that belt tilts up towards the front, and withdraw the belt unit from the printer.

7. Lower the new belt unit into place, with the lifting bar at the front and the drive gear towards the rear of the printer. Locate the drive gear into the gear inside the printer by the rear left corner of the unit, and lower the belt unit flat inside the printer.

8. Turn the two fasteners (5) 90° to the right until they lock. This will secure the belt unit in place.

9. Replace the four image drums, complete with their toner cartridges, into the printer in the same sequence as they came out: cyan (nearest the rear), magenta, yellow and black (nearest the front).

10. Finally, close the top cover and press down firmly at both sides so that the cover latches closed.

FUSER REPLACEMENT

The fuser is located inside the printer just behind the four image drum units.

WARNING!

If the printer has recently been powered on, some fuser components will be very hot. Handle the fuser with extreme care, holding it only by its handle, which will only be mildly warm to the touch. A warning label clearly indicates the area. If in doubt, switch the printer off and wait at least 10 minutes for the fuser to cool before opening the printer cover.

Switch off the printer and allow the fuser to cool for about 10 minutes before opening the cover.

1. Press the cover release and open the printer's top cover fully.

2. Identify the fuser handle (1) on the top of the fuser unit.

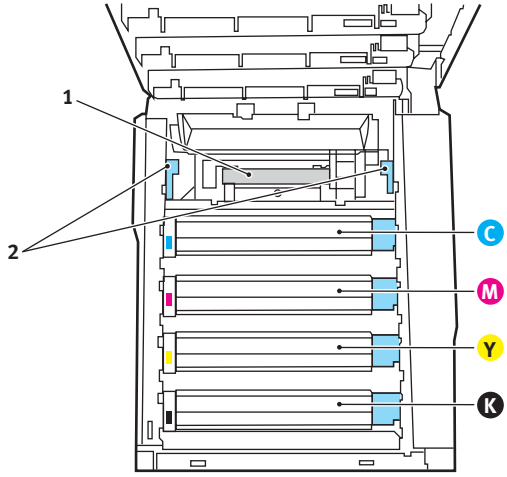

3. Pull the two fuser retaining levers (2) towards the front of the printer so that they are fully upright.

4. Holding the fuser by its handle (1), lift the fuser straight up and out of the printer. If the fuser is still warm, place it on a flat surface which will not be damaged by heat.

5. Remove the new fuser from its packaging and remove the transit material.

6. Holding the new fuser by its handle, make sure that it is the correct way round. The retaining levers (2) should be fully upright, and the two locating lugs (3) should be towards you.

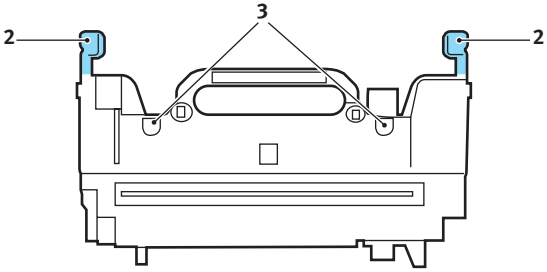

7. Lower the fuser into the printer, locating the two lugs (3) into their slots in the metal partition which separates the fuser area from the image drums.

8. Push the two retaining levers (2) towards the rear of the printer to lock the fuser in place.

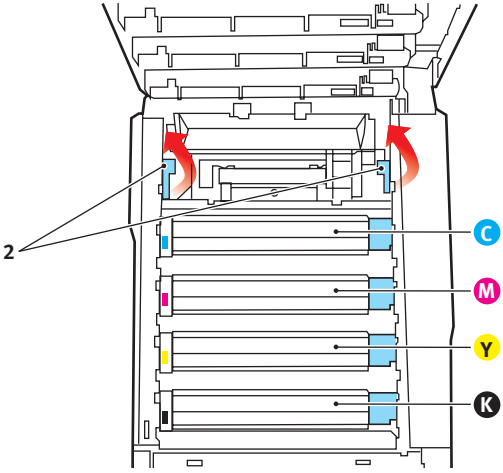

Finally, close the top cover and press down firmly at both sides so that the cover latches closed.

CLEANING THE LED HEAD

Clean the LED head when printing does not come out clearly, has white lines or when text is blurred.

1. Switch off the printer and open the top cover.
2. Gently wipe the LED head surface with LED lens cleaner or soft tissue.

CAUTION!

Do not use methyl alcohol or other solvents on the LED head as damage to the lens surface will occur.

3. Close the top cover.

INSTALLING UPGRADES

This section explains how to install optional equipment into your printer. This includes:

- duplex (two-sided printing) unit;
- additional RAM memory;
- additional paper tray
- cabinet

DUPLEX UNIT

The duplex unit adds the function of two-sided printing, using less paper and making large documents easier to handle. It also enables booklet printing, which uses even less paper and makes large documents even easier to handle.

The duplex unit slides straight into the rear of the printer and requires no tools to install.

1. Unpack the new unit and remove any transit material from it.
2. Switch the printer off. It is not necessary to disconnect the AC power cable.
3. Ensure that the unit is the right way up, as shown, and push it into the slot behind the rear panel. The panel will swing inwards as you push the unit into it. Push the unit all the way in until it stops and latches home.

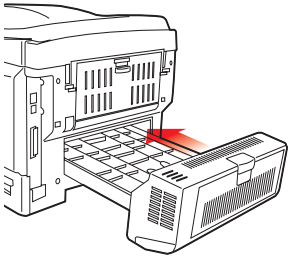

4. Switch the printer on and wait for it to warm up (about 1 minute).

5. Print a menu map as follows:

   (a) Press the **+** button to access the Information Menu.

   (b) Press **ENTER** once for the menu map.

   (c) Press **ENTER** again to print the menu map.

   (d) When the menu map is printed, press **ON LINE** to exit the menu system.

6. Examine the first page of the menu map.

   Near the top of the page, between the two horizontal lines, you will see the current printer configuration. This list should indicate that the duplex unit is now installed.

   All that remains is to adjust the Windows printer driver to make full use of the new features ("Adjusting Windows printer drivers" on page 96).

MEMORY UPGRADE

The basic printer model comes equipped with 64MB of main memory. This can be upgraded with an additional memory board of 64MB or 256MB, giving a maximum total memory capacity of 320MB.

Installation takes a few minutes, and requires a medium size cross-head (Philips type) screwdriver.

1. Switch the printer off and disconnect the AC power cable.
2. Press the cover release and open the printer's top cover fully.

WARNING!

If the printer has been powered on recently, the fuser will be hot. This area is clearly labelled. Do not touch.

3. Lift the front cover latch and pull open the front cover.

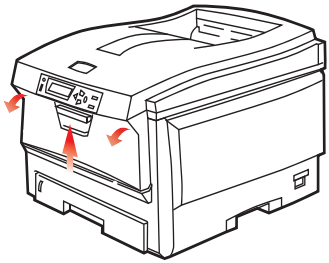

4. Remove the screw (1) securing the right-hand side cover.

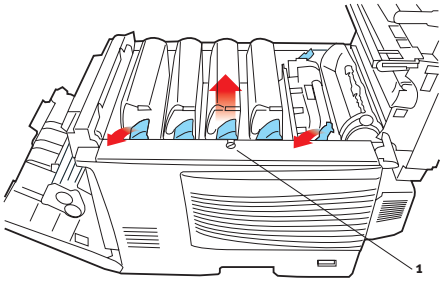

5. Lift the edge of the side cover slightly at the two points shown, and pull the cover away from the printer at the top. Lift the cover slightly to detach it from the printer. Place it safely to one side.

6. Carefully remove the new memory board from its wrapping. Try to handle the board only by its short edges, avoiding contact with any metal parts as far as possible. In particular, avoid touching the edge connector.

7. Notice that the memory board has a small cutout in the edge connector, which is closer to one end than the other.

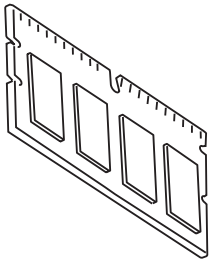

8. Identify the RAM expansion slot (1) in the printer.

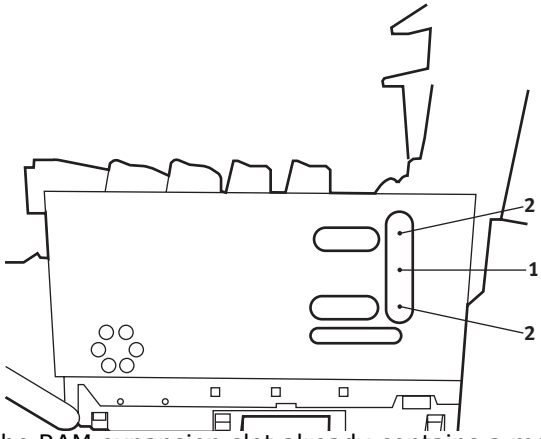

9. If the RAM expansion slot already contains a memory upgrade board, that board will have to be removed before you can install the new one. To remove it, proceed as follows, otherwise skip to step 10.

(a) Identify the locking clips (2) at each end of the RAM expansion slot (1).

(b) Push the clips outward and back into the printer. The board will pop out slightly.

(c) Grip the board firmly by its short edges and pull it out of the slot.

(d) Place the removed memory board in the antistatic bag which originally contained the new memory board.

10. Hold the new memory board by its short edges, so that the edge connector faces in towards the RAM expansion slot, and the small cutout is closer to the rear of the printer.

11. Gently push the board into the RAM expansion slot until it latches in and will not go any further.

12. Locate the three retaining clips at the bottom of the side cover into their rectangular holes near the bottom of the printer.

13. Close the top of the side cover up to the printer and refit the securing screw removed in step 4.

14. Close the front cover and close the top cover, pressing down firmly at each side to latch it closed.

15. Reconnect the AC power cable and switch the printer on.

16. When the printer is ready, print a menu map as follows:

(a) Press the **+** button to access the Information Menu.

(b) Press **ENTER** once for the menu map.

(c) Press **ENTER** again to print the menu map.

(d) When the menu map is printed, press **ON LINE** to exit the menu system.

17. Examine the first page of the menu map.

Near the top of the page, between the two horizontal lines, you will see the current printer configuration. This list contains the figure for total memory size.

This should indicate the total memory now installed.

ADDITIONAL PAPER TRAY

1. Switch the printer off and disconnect the AC power cable.
2. Place additional paper tray on desired location.
3. Observing safety rules for lifting and, using locating guides, place printer on top of the additional paper tray.

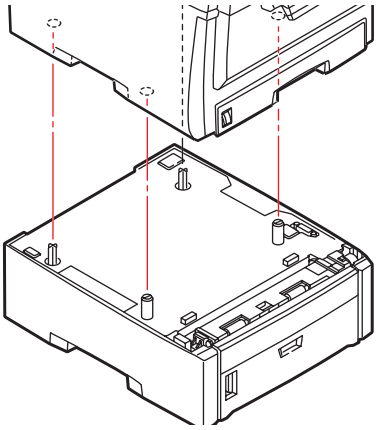

4. Re-connect the AC power cable and switch the printer ON.

ADJUSTING WINDOWS PRINTER DRIVERS

Once your new upgrade has been installed, you may need to update the Windows printer driver so that the additional features are available to your Windows applications.

Remember that if your printer is shared between users on different computers, the driver must be adjusted on each user's machine.

The illustrations shown here are for Windows XP. Other Windows versions may appear slightly different, but the principles are the same.

If you have installed a memory upgrade it is not necessary to change the printer driver, and you can ignore this section.

If you have installed a duplex unit or hard disk, proceed as follows:

1. Open the Printers window (called "Printers and Faxes" in Windows XP) via the **Start** Menu or from the Windows Control Panel.

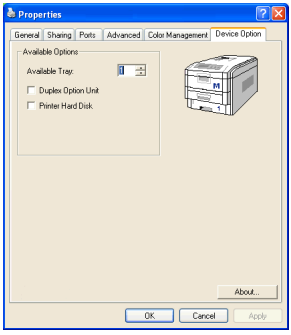

2. Right-click the printer icon for this printer, and choose **Properties** from the pop-up menu.
3. On the **Device Options** tab, check the box for the upgrade you have just installed.
4. Click **OK** to close the properties window, and then close the Printers window.

STORAGE CABINET

Instructions for installing the Storage Cabinet are supplied with the Cabinet.

CLEARING PAPER JAMS

Provided that you follow the recommendations in this guide on the use of print media, and you keep the media in good condition prior to use, your printer should give years of reliable service. However, paper jams occasionally do occur, and this section explains how to clear them quickly and simply.

Jams can occur due to paper misfeeding from a paper tray or at any point on the paper path through the printer. When a jam occurs, the printer immediately stops, and the Alert LED on the Status Panel (together with the Status Monitor) informs you of the event. If printing multiple pages (or copies), do not assume that, having cleared an obvious sheet, others will not also be stopped somewhere along the path. These must also be removed in order to clear the jam fully and restore normal operation.

MAJOR PRINTER COMPONENTS AND PAPER PATH

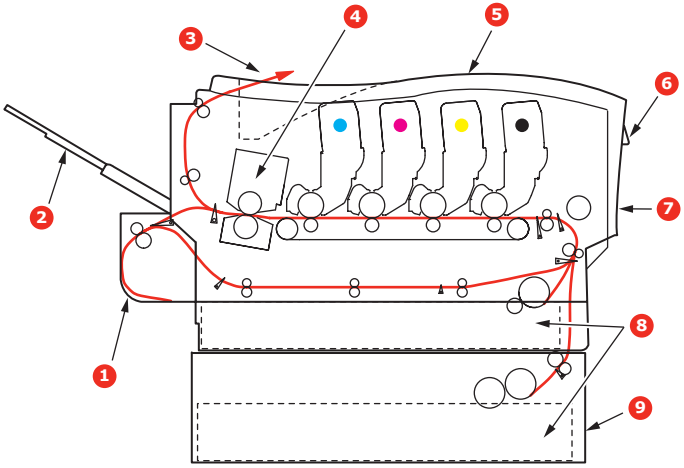

1. Duplex unit (if fitted).	6. Operator panel.
2. Face-up stacker.	7. Front cover.
3. Paper exit.	8. Paper tray.
4. Fuser unit	9. Additional paper tray (if fitted)
5. Top cover.	

PAPER SENSOR ERROR CODES

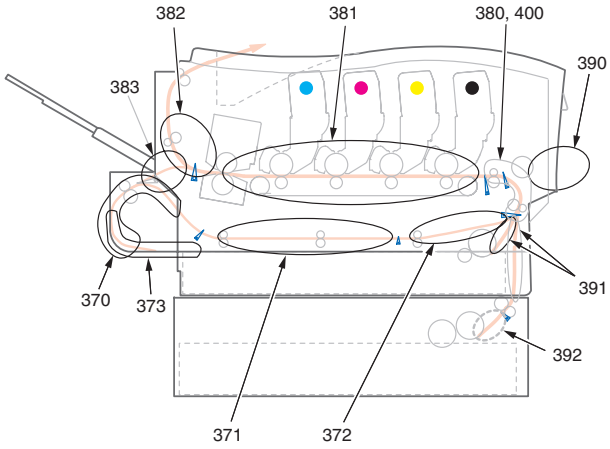

CODE #	LOCATION	CODE #	LOCATION
370	Duplex unit *	382	Paper exit
371	Duplex unit *	383	Duplex unit *
372	Duplex unit *	390	MP Tray
373	Duplex unit *	391	Paper Tray
380	Paper feed	392	2nd Paper tray *
381	Paper path	400	Paper size

* (if fitted).

1. If a sheet is well advanced out of the top of the printer, simply grip it and pull gently to draw it fully out. If it does not remove easily, do not use excessive force. It can be removed from the rear later.

2. Press the cover release and open the printer's top cover fully.

WARNING!

If the printer has been powered on, the fuser will be hot. This area is clearly labelled. Do not touch.

3. Note the positions of the four cartridges.

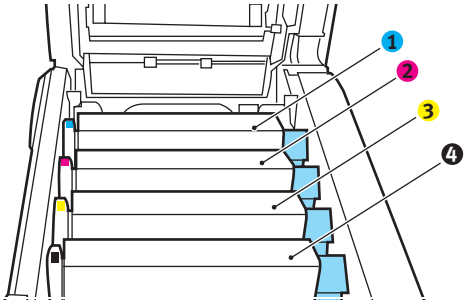

1. Cyan cartridge	2. Magenta cartridge
3. Yellow cartridge	4. Black cartridge

It will be necessary to remove the four image drums to gain access to the paper path.

4. Holding it by its top centre, lift the cyan image drum, complete with its toner cartridge, up and out of the printer.

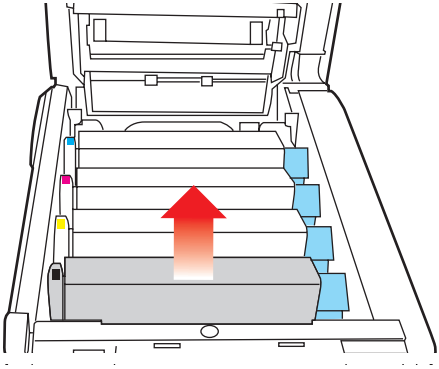

5. Put the cartridge down gently onto a piece of paper to prevent toner from marking your furniture and to avoid damaging the green drum surface.

CAUTION!

The green image drum surface at the base of the cartridge is very delicate and light sensitive. Do not touch it and do not expose it to normal room light for more than 5 minutes.

6. Repeat this removal procedure for each of the remaining image drum units.

7. Look into the printer to check whether any sheets of paper are visible on any part of the belt unit.

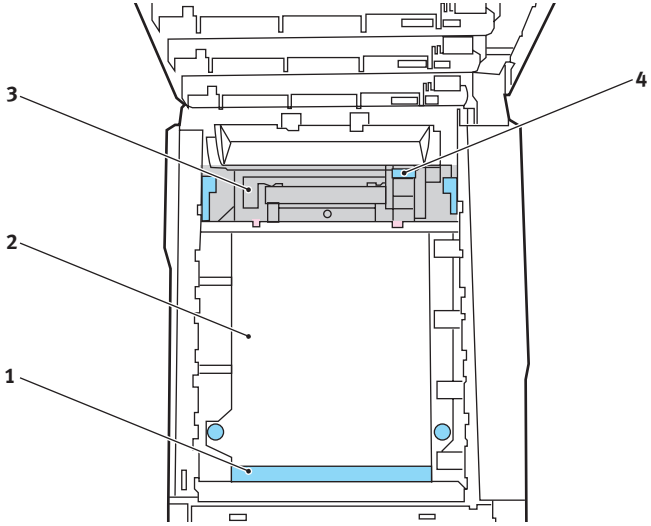

> To remove a sheet with its leading edge at the front of the belt (1), carefully lift the sheet from the belt and pull it forwards into the internal drum cavity and withdraw the sheet.

CAUTION!

Do not use any sharp or abrasive objects to separate sheets from the belt. This may damage the belt surface.

> To remove a sheet from the central area of the belt (2), carefully separate the sheet from the belt surface and withdraw the sheet.

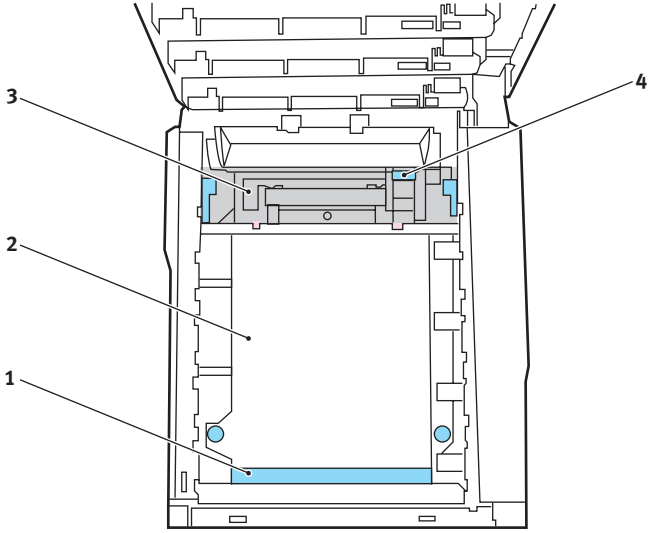

> To remove a sheet just entering the fuser (3), separate the trailing edge of the sheet from the belt, push the fuser pressure release lever (4) towards the front and down to release the fuser's grip on the sheet, and withdraw the sheet through the drum cavity area. Then allow the pressure release lever to rise again.

NOTE
If the sheet is well advanced into the fuser (only a short length is still visible), do not attempt to pull it back. Follow the next step to remove it from the rear of the printer.

---

8. Starting with the cyan image drum unit nearest the fuser, replace the four image drums into the drum cavity, making sure to locate them in the correct order.

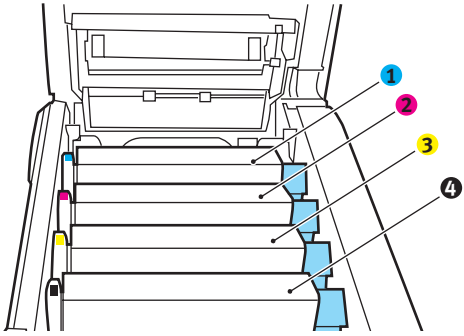

1. Cyan cartridge	2. Magenta cartridge
3. Yellow cartridge	4. Black cartridge

> Holding the complete assembly by its top centre, lower it into place in the printer, locating the pegs at each end into their slots in the sides of the printer cavity.

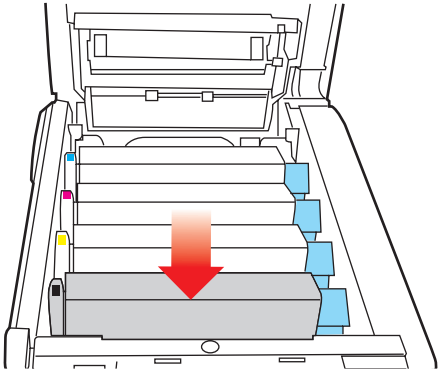

9. Lower the top cover but do not press down to latch it closed yet. This will protect the drums from excessive exposure to room lighting while you check the remaining areas for jammed sheets.

10. Open the rear exit tray (5) and check for a sheet of paper in the rear path area (6).

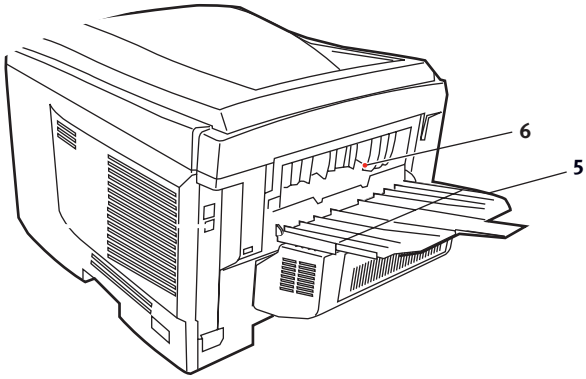

> Pull out any sheets found in this area.

> If the sheet is low down in this area and difficult to remove, it is probably still gripped by the fuser. In this case raise the top cover, reach around and press down on the fuser pressure release lever (4).

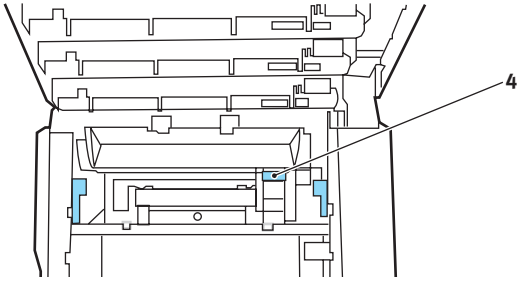

11. If you are not using the rear exit tray, close it once paper has been removed from this area.

12. Lift the front cover release and pull open the front cover.

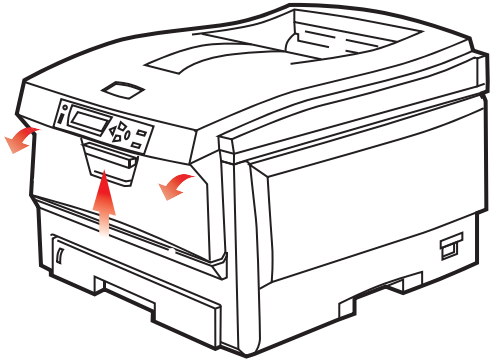

13. Check inside the cover for sheets in this area and remove any that you find, then close the cover.

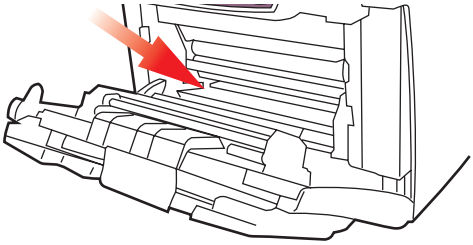

14. Pull out the paper tray and ensure that all paper is stacked properly, is undamaged, and that the paper guides are properly positioned against the edges of the paper stack. When satisfied, replace the tray.

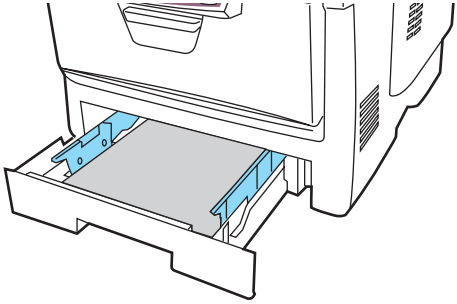

15. Finally, close the top cover and press down firmly at both sides so that the cover latches closed.

When the jam has been cleared, if Jam Recovery is set to ON in the System Configuration Menu, the printer will attempt to reprint any pages lost due to paper jams.

SPECIFICATIONS

C5650/C5850 - N31175B

ITEM	SPECIFICATION
Dimensions	435 x 563 x 339mm (W x D x H) without Duplex unit
Weight	26Kg approx. (without Duplex unit)
Print method	LED exposed light source electronic photographic method
Print speeds	C5650: 22 pages per minute colour / 32 pages per minute monochrome C5850: 26 pages per minute colour / 32 pages per minute monochrome
Resolution	600 x 600, 600 x 1200dpi or 600 x 600dpi x 2bit
Auto Features	Auto registration Auto density adjustment Auto consumable counter reset
Memory	64MB standard, upgradable to 128MB or 320MB
Operating platform	Windows 2000/XP/XP Pro x64 bit Edition*/NT4.0 /Server 2003/Server 2003 x64 bit Edition*, Vista 32 & 64 bit. * x86-64 processors only. Itanium is not supported. Mac OS X (10.2 or higher), Classic
Paper capacity at 80g/m²	300 sheets in main tray 530 sheets in optional 2nd tray 100 sheets in multi purpose tray (or 50 transparencies or 10 envelopes)
Paper weight	64 ~ 120g/m² in main tray 64 ~ 176g/m² in 2nd tray 64 ~ 203g/m² in multi purpose tray
Paper output	250 sheets in face down (top) stacker @ 80g/m² 100 sheets in face up (rear) stacker @ 80g/m²
Paper feed [1]	Paper tray, manual feed, optional additional paper tray(s)
Media size - any tray	A4, A5, A6 (tray 1 only), B5, Legal 13/13.5/14 inch, letter, Executive.
Media size - MP tray	A4, A5, A6, B5, Legal 13/13.5/14 inch, letter, executive, custom (up to 1200mm length), com-9 envelope, com-10 envelope, monarch envelope, DL envelope, C5 envelope

ITEM	SPECIFICATION
Media type	Plain, Letterhead, Transparency, Bond, Recycled, card stock, Rough, Labels and Glossy
Paper capacity (depending on paper weight)	Paper tray: 300 sheets approx. Manual feed: 100 sheets approx. Optional additional paper tray: 530
Exit capacity (depending on paper weight)	Face up: 100 sheets approx. Face down: 500 sheets approx.
Print accuracy	Start: ±2 mm Paper skew: ±1 mm/100 mm Image expansion/compression: ±1 mm/100 mm
Interfaces Universal Serial Bus (USB) Network	 USB specification Version 2.0 Connection: USB type B Cable: USB specification version2.0 (shielded) Transmission mode: Full speed (480Mbps + 0.25% maximum) 10 Base T, 100 Base TX
Printer life	420,000 pages or 5 years
Duty cycle	50,000 pages per month max., 4,000 pages per month average
Toner life	**Starter:** C, M, Y & K:1,500 pages at 5% coverage **Replacement:** **Black:** 8,000 pages at 5% coverage **CMY:** C5650 - 2,000 pages at 5% coverage C5850 - 6,000 pages at 5% coverage
Image drum life	20,000 pages (25000 at continuous print, 18,000 at 3 pages per job and 9,000 pages at 1 page per job)
Belt life	60,000 A4 pages at 3 pages per job
Fuser life	60,000 A4 pages
Power supply	220 to 240VAC @ 50/60 Hz ± 2%

ITEM	SPECIFICATION
Power consumption	Operating: 1200 max.; 490 W av. (25°C) Stand-by: 100 max.; 150 W av. (25°C) Power saving: 45 W max. (20ppm colour) Power saving: 70 W max. (26ppm colour)
Operating environment	Operating 10 to 32 °C/20 to 80% RH (optimum 25 °C wet, 2 °C dry) Off: 0 to 43 °C/10 to 90% RH (optimum 26.8 °C wet, 2 °C dry)
Print environment	30 to 73% RH @ 10 °C; 30 to 54% RH @ 32 °C 10 to 32 °C @ 30% RH; 10 to 27 °C @ 80% RH Colour 17 to 27 °C @ 50 to 0% RH
Noise (Sound pressure level)	Colour / Mono C5650: Operating: 52.6dB(A) / 55,6dB(A) Standby: 37dB(A) C5850: Operating: 53.8dB(A) / 55.6dB(A) Standby: 37dB(A)

1. Exit method is limited by paper size, media weight and paper feed.

Specifications subject to change without notice. All trademarks acknowledged.

INDEX

A

Advanced features
enabling or disabling 26

B

Belt
how to replace 84
life expectancy 73
life remaining 66
Black printing
glossy or matte 23
Booklet printing 21

C

Cleaning the LED head 89
Colour
adjusting 60
Colour matching
choosing image source 48
general advice 44
general settings 23
how to access 47
printing colour swatch 49

D

Duplex
how to install 90
paper size and weight limits 14
selecting in Windows 21

E

Envelopes
loading 19

F

Fuser
how to replace 87
life expectancy 73
life remaining 66

I

Image drum
how to replace 80
life expectancy 73
Image drums
current usage state 66

L

Labels
recommended types 12

M

Mac 28
Mac OS X 28
Changing the default printer and paper size 30
Print options 31
Printer setup options 41
Setting Printing Options 28, 29
Major printer components and paper path 97
Menu functions
How to change the settings - Administrator 54
How to change the settings - User 53
Menus
Colour menu 60
factory default settings 53
how to use 52
Information menu 55
Maintenance menu 65
Media menu 58
menu map 55
Network menu 62
Print menu 56
resetting 65
saving current settings 65
System configuration menu 61
Usage menu 66
USB menu 62, 63
Multi purpose tray
how to use 18
paper metrics 13

N

Network addresses
setting 62
Network protocols
enabling or disabling 62

P

Page orientation
setting in Windows 22
Paper
jam clearing 97
jam codes 98
loading cassette trays 15
loading letterhead 16
Paper jam codes 98
recommended types 12
size setting in Windows 21
supported sheet sizes 13
tray selection in Windows 21
weight selection in Windows 21
weights and sizes 58
Poster printing 21

Power saving
delay time 61
enabling or disabling 65
Print order
face down stacker 17
face up stacker 17
Print quality
adjusting 65
Print settings
how to save 21
Printer default settings
Windows defaults 24
Printer overview 9
Priority
print queue priority 25

R

Resolution
setting in Windows 22

S

Spooling
Windows settings 25

T

Toner
current usage state 66
how to replace 75
life expectancy 73
Transparencies
recommended types 12

U

Upgrades
memory 91

W

Watermark
printing in Windows 22

OKI CONTACT DETAILS

Oki Systems (UK) Limited
550 Dundee Road
Slough Trading Estate
Slough, SL1 4LE

Tel:44 (0) 1753 819819
Fax:44 (0) 1753 819899
http://www.oki.co.uk

Oki Systems Ireland Limited
The Square Industrial Complex
Tallaght, Dublin 24, Ireland

Tel:+353 1 4049590
Fax:+353 1 4049591
http://www.oki.ie

OKI Systems (Ireland) Ltd.
40 Sydenham Park
Belfast, BT4 1PW

Tel:+44 44 (0)28 90 20 1110
http://www.oki.ie

Technical Support for all of Ireland:
Tel: +353 1 4049570
Fax: +353 1 4049555
E-mail: tech.support@oki.ie

Oki Data Corporation
4-11-22 Shibaura, Minato-ku,
Tokyo 108-8551, Japan

Tel: (81) 3 5445 6158
Fax: (81) 3 5445 6189
http://www.okidata.co.jp

Oki Data (Singapore) Pte. Ltd.
78 Shenton Way, #09-01,
Singapore 079120

Tel: (65) 221 3722
Fax: (65)421 1688
http://www.okidata.com.sg

Oki Systems (Thailand) Ltd.
956 Udomvidhya Building 6th
Floor, Rama IV Rd., Bangkok
10500, Thailand

Tel: (662) 636 2535
Fax: (662) 636 2536
http://www.okisysthai.com

Oki Hong Kong Limited
Suite 1909, Tower3,
China Hong Kong City,
33 Canton Rd., Tsimshatsui,
Kowloon, Hong Kong

Tel: (852) 2736 0130
Fax: (852) 2376 3725

The IPL Group
63-85 Victoria Street
Beaconsfield NSW 2015,
Australia

Tel: (61) 2 9690 8200
Fax: (61) 2 9690 8300
http://www.oki.com.au

Comworth Systems Ltd.
10 Constellation Drive
Mairangi Bay, Auckland,
New Zealand

Tel: (64) 9 477 0500
Fax: (64) 9 477 0549
http://www.comworth.co.nz

Oki Europe Limited
Central House
Balfour Road
Hounslow TW3 1HY
United Kingdom

Tel: +44 (0) 208 219 2190
Fax: +44 (0) 208 219 2199
www.okiprintingsolutions.com

07086601 iss.1